P–5323

18056

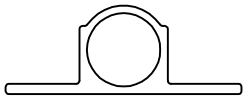

1:1

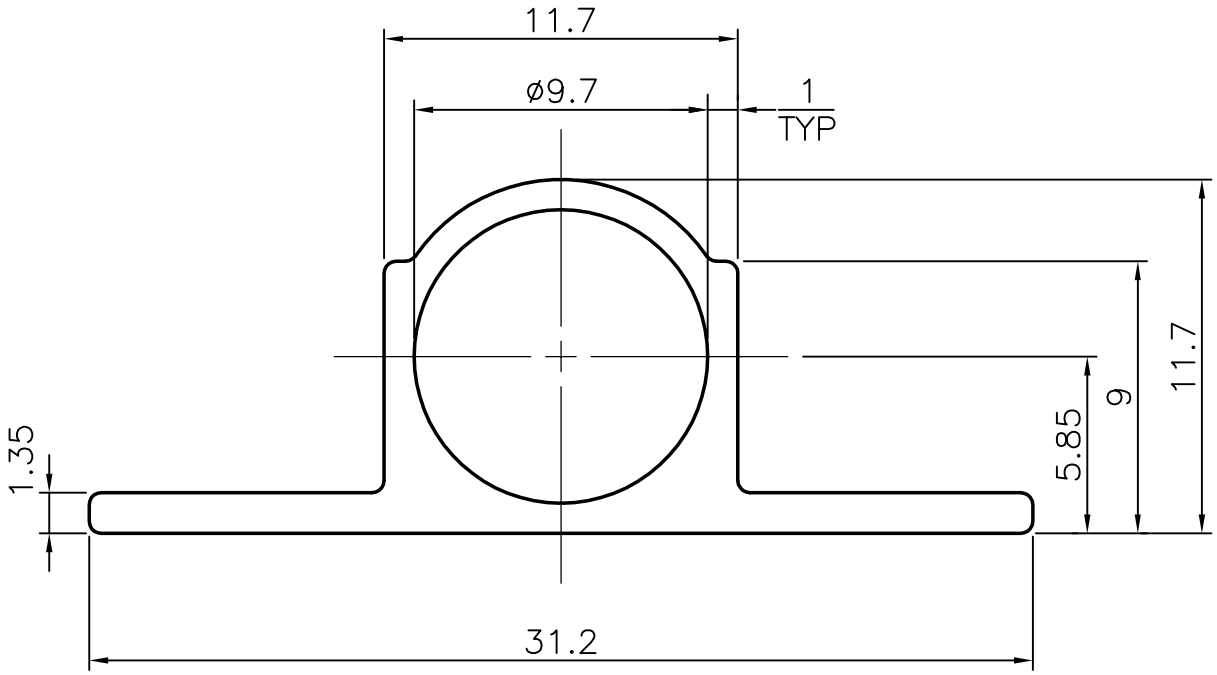

AVERAGE WEIGHT:– 0.753 kg/ 3658 mm.

			NAME	DATE
JINDAL SYMBOL OF QUALITY AN ISO 9002 COMPANY	*JINDAL ALUMINIUM LTD.* *BANGALORE–560073 (INDIA)*	DRAWN	MALINGAPPA	24.02.2005
		CHECKED		
		APPROVED		

1. ALL DIMENSIONS ARE IN mm.
2. ROUND OFF ALL SHARP CORNERS WITH 0.40 mm.
3. TOLERANCES WILL BE AS PER IS: 6477–1983 UNLESS OTHERWISE SPECIFIED

SCALE		1:1	
AREA mm^2		76.373	
PERIMETER mm.		80.822	
WEIGHT kg/m		0.206	
DRAWING No.	SECTION No.		
P–5323	–		
18056	18056		

PARTY'S NAME	GENERAL CATEGORY, DELHI MARKET
PARTY'S DRAWING No.	LIGHTER OF SECTION NO. 18017
ALLOY & TEMPER	HE9 WP
DESCRIPTION	TOWER BOLT