4249
14333
18560

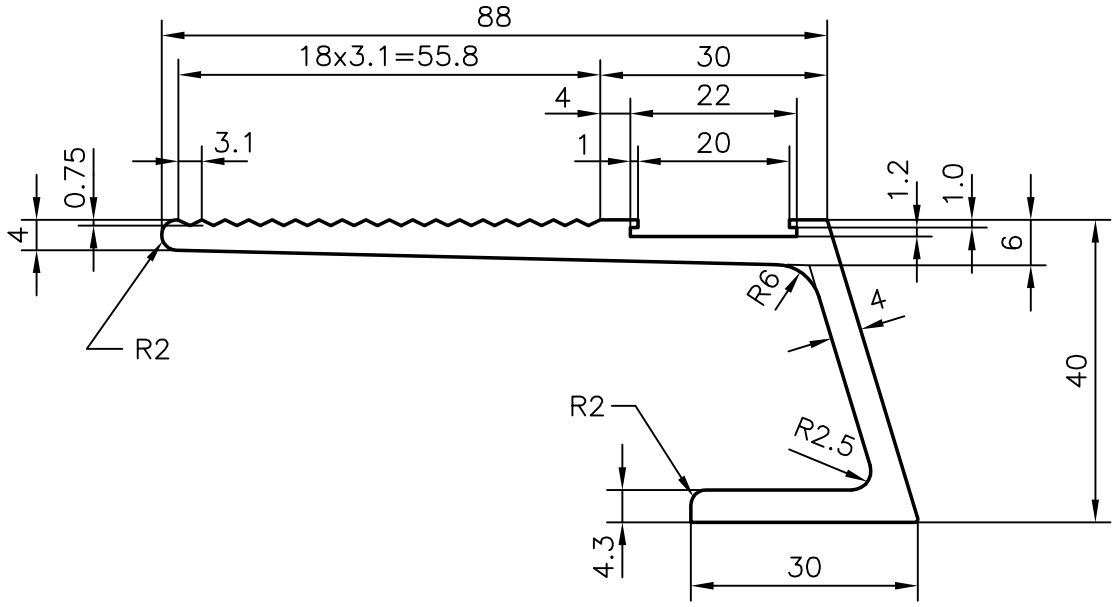

JINDAL ALUMINIUM LTD. *BANGALORE–560073*			NAME	DATE
		DRAWN	R.D.Sharma	01–12–95
1. ALL DIMENSIONS ARE IN mm. 2. ROUND OFF ALL SHARP CORNERS WITH 0.4 mm. 3. TOLERANCES WILL BE AS PER IS: 3965–1981 ,UNLESS OTHERWISE SPECIFIED		CHECKED		
		APPROVED		
PARTY'S NAME	–	SCALE	1:1	
PARTY'S DRAWING No.	–	WEIGHT kg/m	1.709	
ALLOY & TEMPER	HE9 WP	SECTION No.	18560	
LENGTH	3658 mm.	DRAWING No.		
DESCRIPTION	HANDLE SECTION	18560		