4254
14335
18562

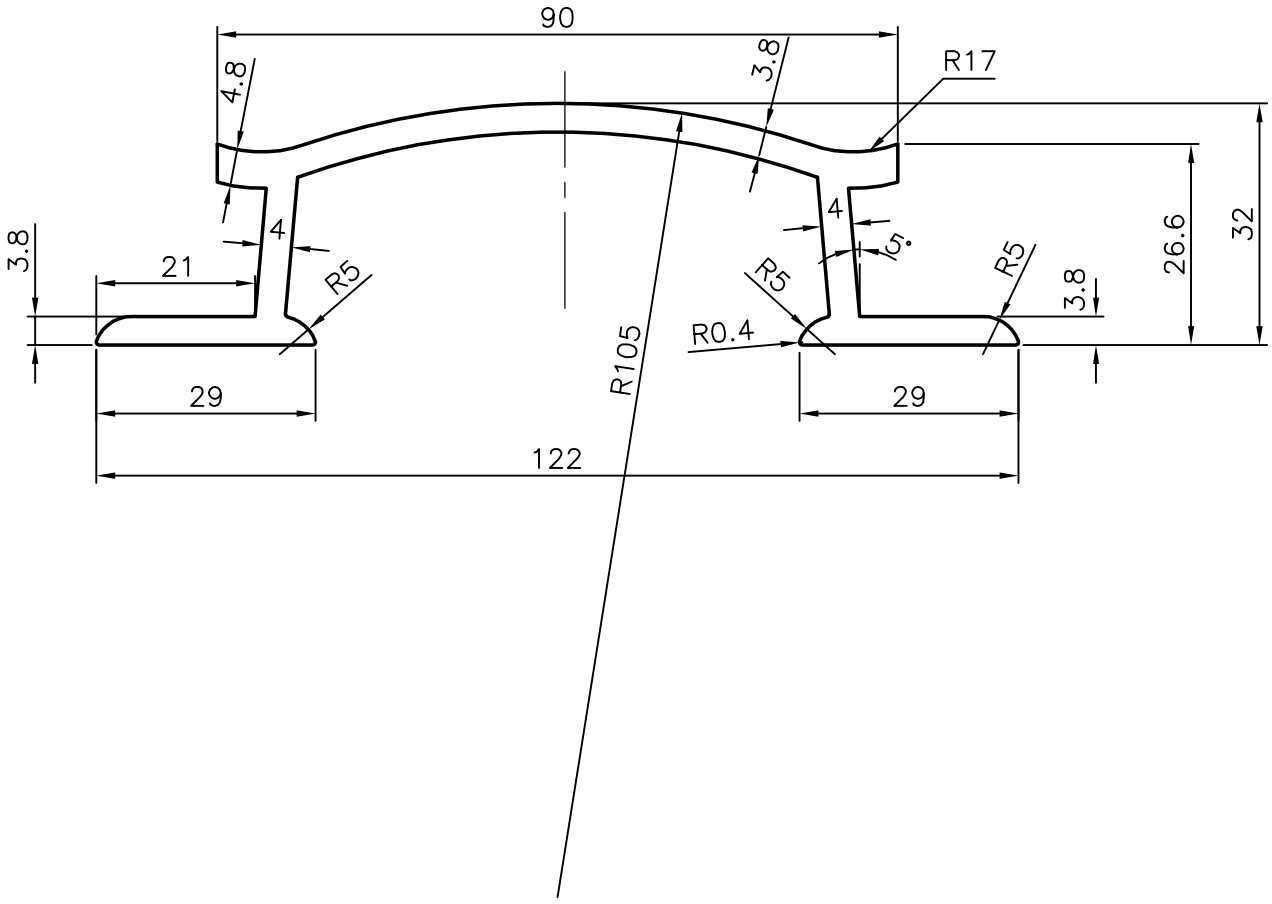

JINDAL SYMBOL OF QUALITY AN ISO 9002 COMPANY	*JINDAL ALUMINIUM LTD.* *BANGALORE–560073 (INDIA)*				NAME	DATE
				DRAWN	S.KUMAR	9–4–79
				CHECKED		
1. ALL DIMENSIONS ARE IN mm 2. ROUND OFF SHARP CORNERS WITH 0.4mm R 3. TOLERANCES WILL BE AS PER IS : 3965–1981				APPROVED		
PARTY'S NAME	–			SCALE	1:1	
				WEIGHT kg/m	1.920	
PARTY'S DRAWING No.	–	FINISH	–	SECTION No.	18562	
ALLOY & TEMPER	HE 9 WP	LENGTH:	–	DRAWING No.		
DESCRIPTION	HANDLE SECTION			18562		