4477
14302
18583

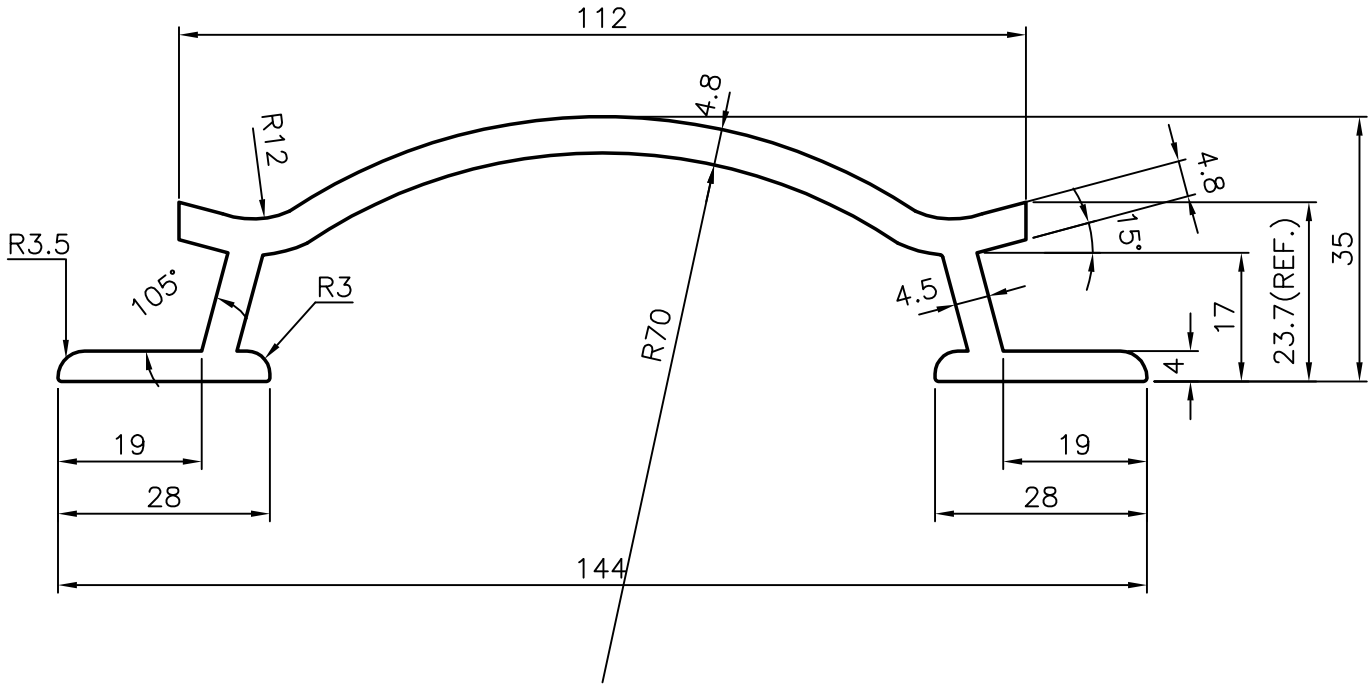

NOTE:–

MINIMUM WT. : 8.7 kg/PIECE

JINDAL SYMBOL OF QUALITY AN ISO 9002 COMPANY	*JINDAL ALUMINIUM LTD.* *BANGALORE–560073 (INDIA)*				NAME	DATE
				DRAWN	PRASAD	7–7–89
				CHECKED		
1. ALL DIMENSIONS ARE IN mm 2. ROUND OFF SHARP CORNERS WITH 0.4mm R 3. TOLERANCES WILL BE AS PER IS : 3965–1981				APPROVED		
				SCALE	1:1	
PARTY'S NAME	–			WEIGHT kg/m	2.378	
PARTY'S DRAWING No.	–	FINISH	–	SECTION No.	18583	
ALLOY & TEMPER	HE 9 WP	LENGTH:	3658mm.	DRAWING No. 18583		
DESCRIPTION	HANDLE SECTION					