P−19264
X2486
18660

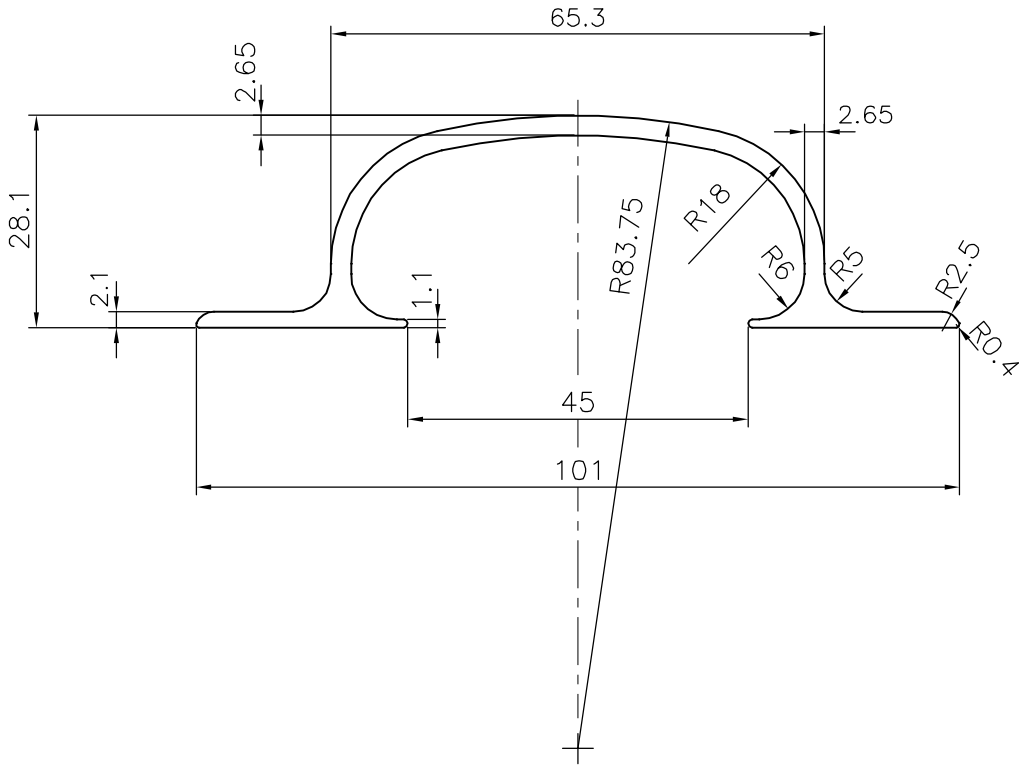

JINDAL SYMBOL OF QUALITY AN ISO 9001 COMPANY	*JINDAL ALUMINIUM LTD.* *BANGALORE−560073 (INDIA)*		NAME	DATE
		DRAWN	J.P.KAUSHIK	11−03−2019
		CHECKED		
		APPROVED	B.NATARAJA	13−03−2019
1. ALL DIMENSIONS ARE IN mm. 2. ROUND OFF ALL SHARP CORNERS WITH 0.40 mm. 3. TOLERANCES WILL BE AS PER IS:3965−1981 UNLESS OTHERWISE SPECIFIED		SCALE		1:1
		AREA mm^2		377.141
		PERIMETER mm.		291.756
PARTY'S NAME	ATCO ALUMINIUM SYSTEMS, NEW DELHI	WEIGHT kg/m		1.018
		DRAWING No.		SECTION No.
PARTY'S DRAWING No.	AS PER DRAWING	P−19264		
ALLOY & TEMPER	HE9 WP A3D	X2486		X2486
		18660		18660
DESCRIPTION	HANDLE SECTION			