4306
14016
19223

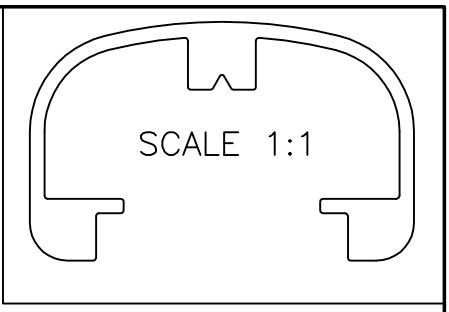

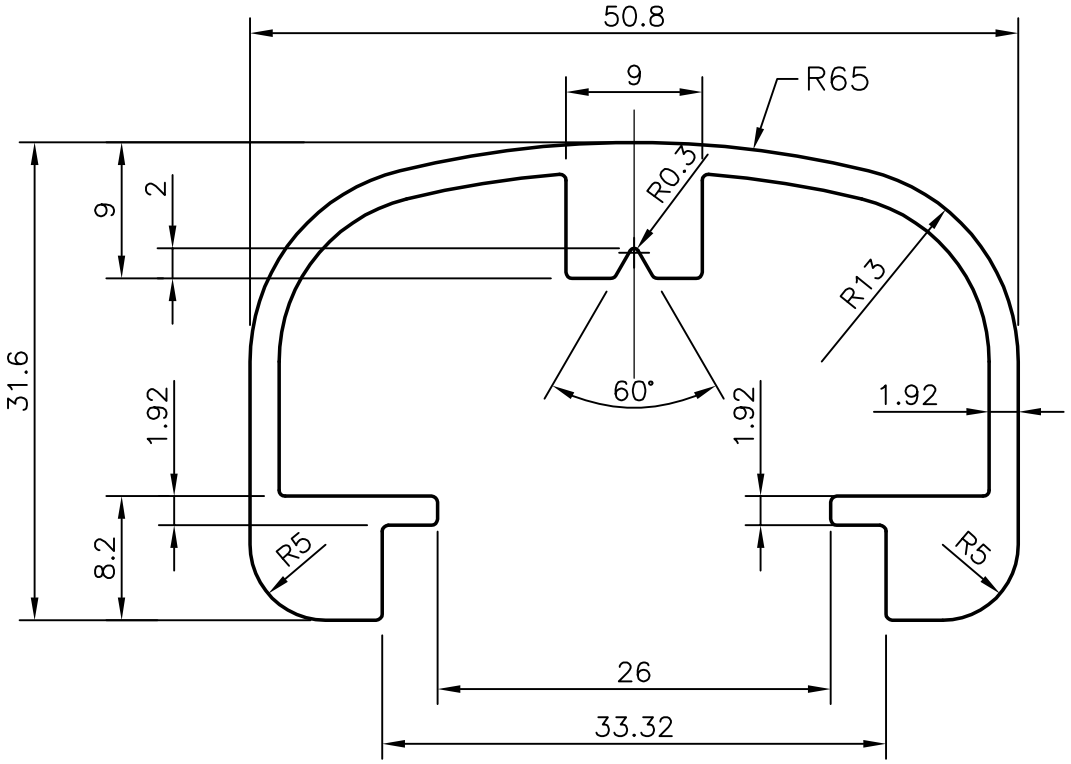

1. GENERAL WALL THICKNESS:– 1.92 mm.
2. 3658 mm. LONG PIECES IN 100 kgs:– 28 (AVERAGE)

JINDAL
SYMBOL OF QUALITY
AN ISO 9001 COMPANY

JINDAL ALUMINIUM LTD.
BANGALORE–560073 (INDIA)

1. ALL DIMENSIONS ARE IN mm.
2. ROUND OFF ALL SHARP CORNERS WITH 0.40 mm.
3. TOLERANCES WILL BE AS PER IS: 3965–1981 UNLESS OTHERWISE SPECIFIED

	NAME	DATE
DRAWN	RAGHAVENDRA	25–11–01
CHECKED		
APPROVED		

SCALE	2:1 & 1:1
AREA mm^2	321.512
PERIMETER mm.	251.14
WEIGHT kg/m	0.975
SECTION No.	19223
DRAWING No.	19223

PARTY'S NAME	–
PARTY'S DRAWING No.	LIGHTER OF 4286
ALLOY & TEMPER	HE9 WP
DESCRIPTION	HAND RAIL