4309
14019
19226

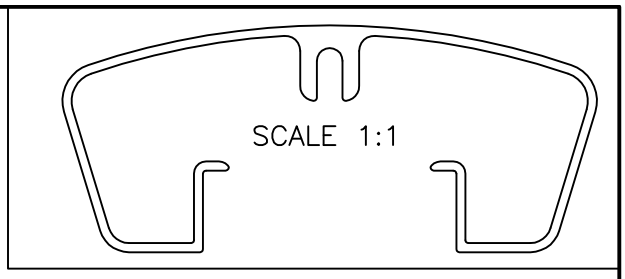

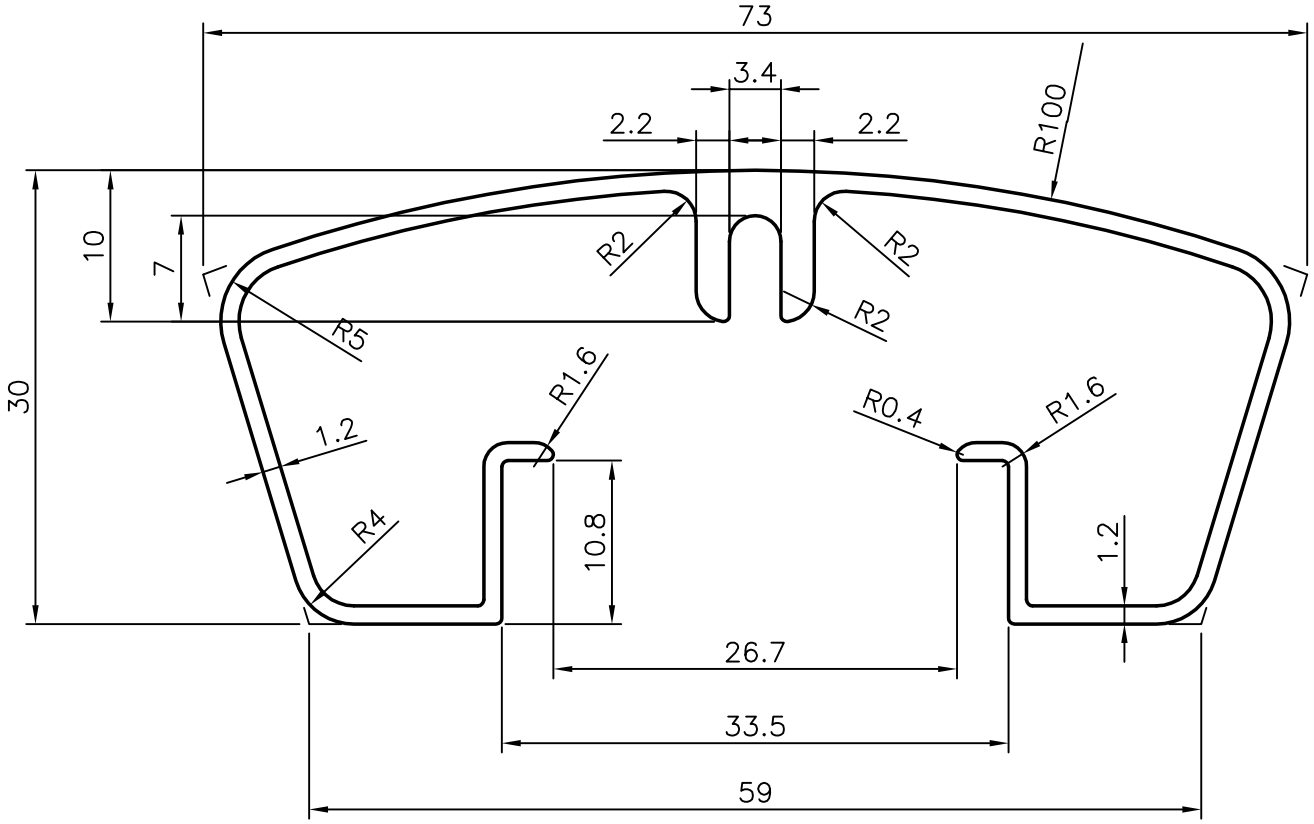

GENERAL WALL HICKNESS = 1.2 mm
3658 mm LONG PIECES IN 100 kgs:– 040 (AVERAGE)

JINDAL SYMBOL OF QUALITY AN ISO 9001 COMPANY	*JINDAL ALUMINIUM LTD.* *BANGALORE–560073 (INDIA)*		NAME	DATE
		DRAWN	PRASANN.H	05–01–2007
		CHECKED		
		APPROVED		
1. ALL DIMENSIONS ARE IN mm. 2. ROUND OFF ALL SHARP CORNERS WITH 0.4 mm. 3. TOLERANCES WILL BE AS PERIS:3965–1981 UNLESS OTHERWISE SPECIFIED		SCALE		2:1
		AREA mm^2		245.718
		PERIMETER mm.		360.174
		WEIGHT kg/m		0.684
PARTY'S NAME	–	DRAWING No.		SECTION No.
PARTY'S DRAWING No.	LIGHTER OF SECTION NO. 4287	4309		4309
		14019		14019
ALLOY & TEMPER	HE9 WP	19226		19226
DESCRIPTION	CHANNEL			