P–3953–1
4311
19228

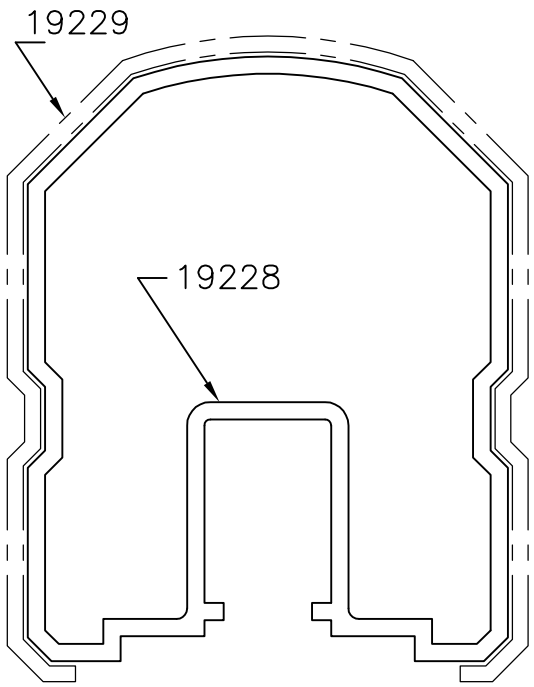

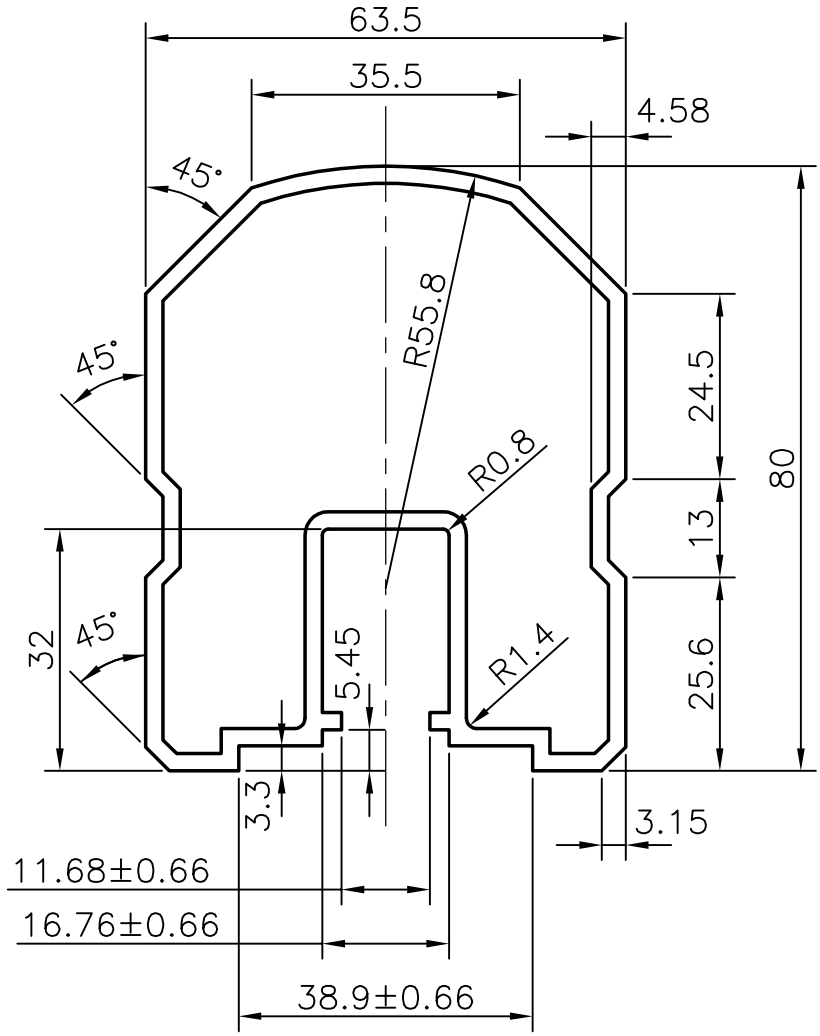

GENERAL WALL THICKNESS:– 2.29 ±0.18 mm.

			NAME	DATE
JINDAL SYMBOL OF QUALITY AN ISO 9002 COMPANY	*JINDAL ALUMINIUM LTD.* *BANGALORE–560073 (INDIA)*	DRAWN	R.D.Sharma	04–09–02
		CHECKED		
		APPROVED		
1. ALL DIMENSIONS ARE IN mm. 2. ROUND OFF ALL SHARP CORNERS WITH 0.40 mm. 3. TOLERANCES WILL BE AS PER COMMERCIAL UNLESS OTHERWISE SPECIFIED		SCALE	1:1	
PARTY'S NAME	PROSOURCE INDUSTRIAL SOLUTIONS INC.	AREA mm^2	746.1	
		PERIMETER	339 mm	
PARTY'S DRAWING No.	WH–9953	WEIGHT kg/m	2.014	
ALLOY & TEMPER	6060 T5	SECTION No.	19228	
DESCRIPTION	CARRINGTON RAIL	DRAWING No.	19228	