4425
14606
19362

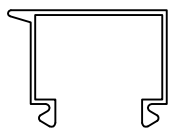

1:1

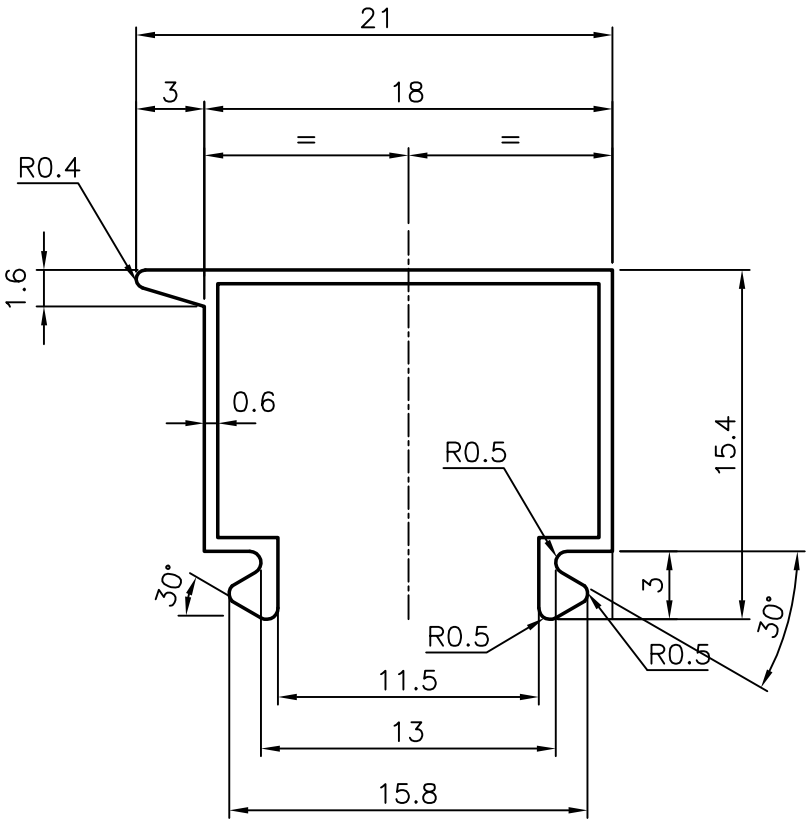

GEN. WALL THICKNESS:– 0.6mm.
SUITABLE FOR SECTION NOS. 8802, 8803, 8804.

JINDAL SYMBOL OF QUALITY AN ISO 9002 COMPANY	***JINDAL ALUMINIUM LTD.*** ***BANGALORE–560073 (INDIA)***				NAME	DATE
				DRAWN	R.D.SHARMA	21–3–90
1. ALL DIMENSIONS ARE IN mm 2. ROUND OFF SHARP CORNERS WITH 0.4mm R 3. TOLERANCES WILL BE AS PER IS : 3965–1981				CHECKED		
				APPROVED		
PARTY'S NAME	–			SCALE	3:1	
				WEIGHT kg/m	0.108	
PARTY'S DRAWING No.	–	FINISH	–	SECTION No.	[redacted] 19362	
ALLOY & TEMPER	HE 9 WP	LENGTH:	3658mm	DRAWING No.		
DESCRIPTION	CLIP SECTION			[redacted] 19362		