4427
19363

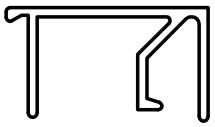

1:1

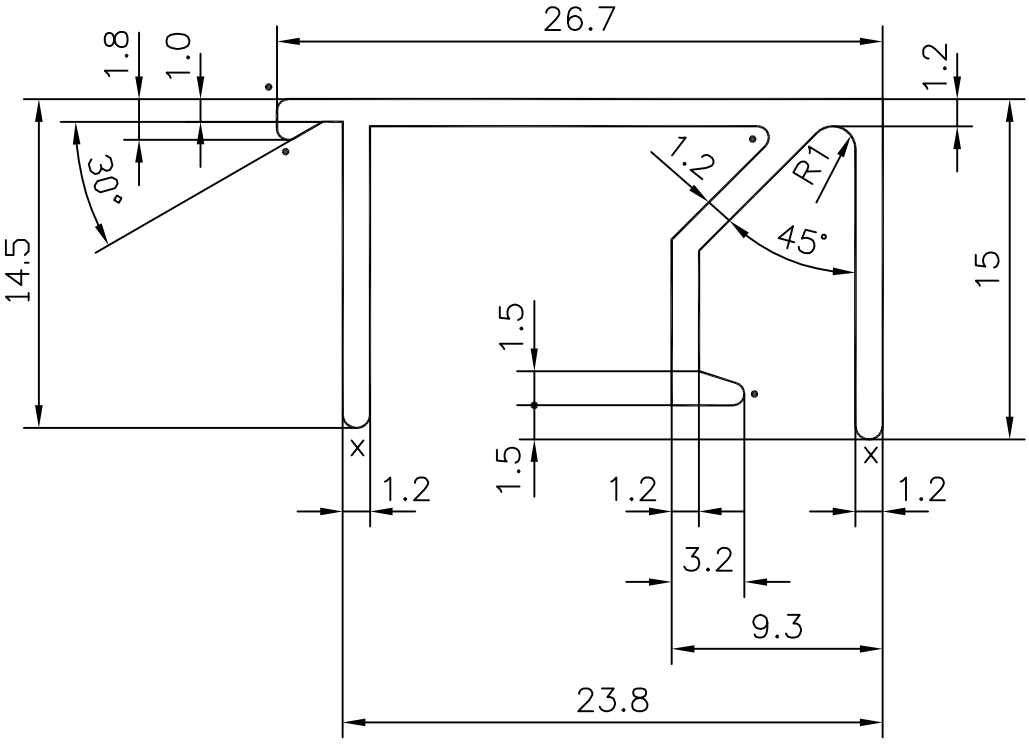

• = 0.50 (4)

x = FULL RADIUS (2)

JINDAL ALUMINIUM LTD. BANGALORE–560073		NAME	DATE
	DRAWN	R.D.Sharma	28–8–95
1. ALL DIMENSIONS ARE IN mm. 2. ROUND OFF ALL SHARP CORNERS WITH 0.4 mm. 3. TOLERANCES WILL BE AS PER IS : 3965–1981 UNLESS OTHERWISE SPECIFIED	CHECKED		
	APPROVED		

PARTY'S NAME	UNIVERSAL ALUMINIUM CO.,BAHRAIN	SCALE	1:1 & 3:1
PARTY'S DRAWING No.	S 5920	WEIGHT kg/m	0.229
ALLOY & TEMPER	HE9 WP	SECTION No.	19363
LENGTH	5850 mm.	DRAWING No.	19363
DESCRIPTION	GLAZING CLIP		