4636
11123
19387

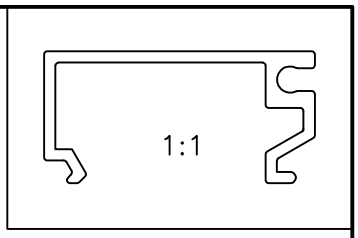

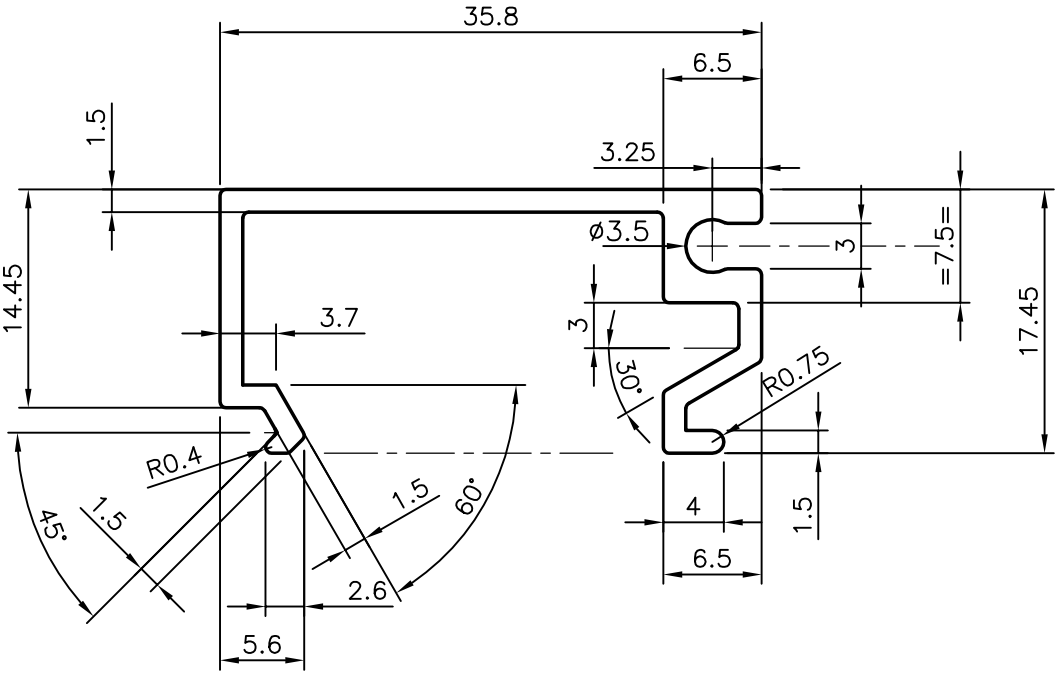

GENERAL WALL THICKNESS 1.50 mm

MATCHING SECTION No 20020

			NAME	DATE
JINDAL SYMBOL OF QUALITY AN ISO 9002 COMPANY	*JINDAL ALUMINIUM LTD.* *BANGALORE–560073 (INDIA)*	DRAWN	J.P.KAUSHIK	14–12–2005
		CHECKED		
		APPROVED		
1. ALL DIMENSIONS ARE IN mm. 2. ROUND OFF ALL SHARP CORNERS WITH 0.40 mm. 3. TOLERANCES WILL BE AS PER IS:3965–1981 UNLESS OTHERWISE SPECIFIED		SCALE		2:1
		AREA mm^2		129.31
		PERIMETER mm.		161.937
PARTY'S NAME	–	WEIGHT kg/m		0.349
		DRAWING No.		SECTION No.
PARTY'S DRAWING No.	–	4636		4636
		11123		11123
ALLOY & TEMPER	HE9 WP	19387		19387(ISSUE–2)
DESCRIPTION	CLIP SECTION			