8461	
19391	

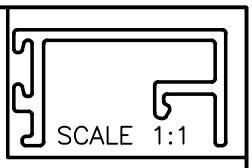

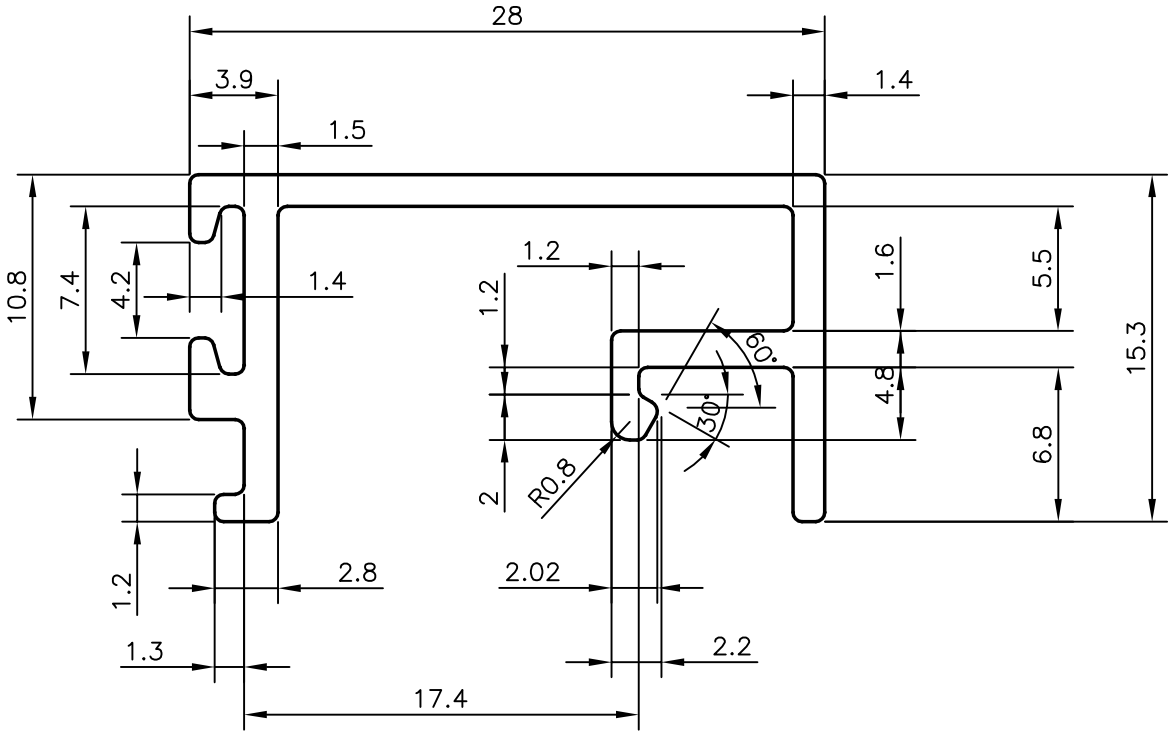

JINDAL SYMBOL OF QUALITY AN ISO 9001 COMPANY	*JINDAL ALUMINIUM LTD.* *BANGALORE–560073 (INDIA)*		NAME	DATE
		DRAWN	PRASANNA.H.	13–12–2006
		CHECKED		
		APPROVED		
1. ALL DIMENSIONS ARE IN mm. 2. ROUND OFF ALL SHARP CORNERS WITH 0.40 mm. 3. TOLERANCES WILL BE AS PER IS:3965–1981 UNLESS OTHERWISE SPECIFIED		SCALE		3:1
		AREA mm^2		107.217
		PERIMETER mm.		146.383
PARTY'S NAME	M. B. HYDER	WEIGHT kg/m		0.289
		DRAWING No.		SECTION No.
PARTY'S DRAWING No.	44–140	8461		–
		19391		19391
ALLOY & TEMPER	HE9 WP			
DESCRIPTION	WINDOW SECTION			