P-13174-1

19466

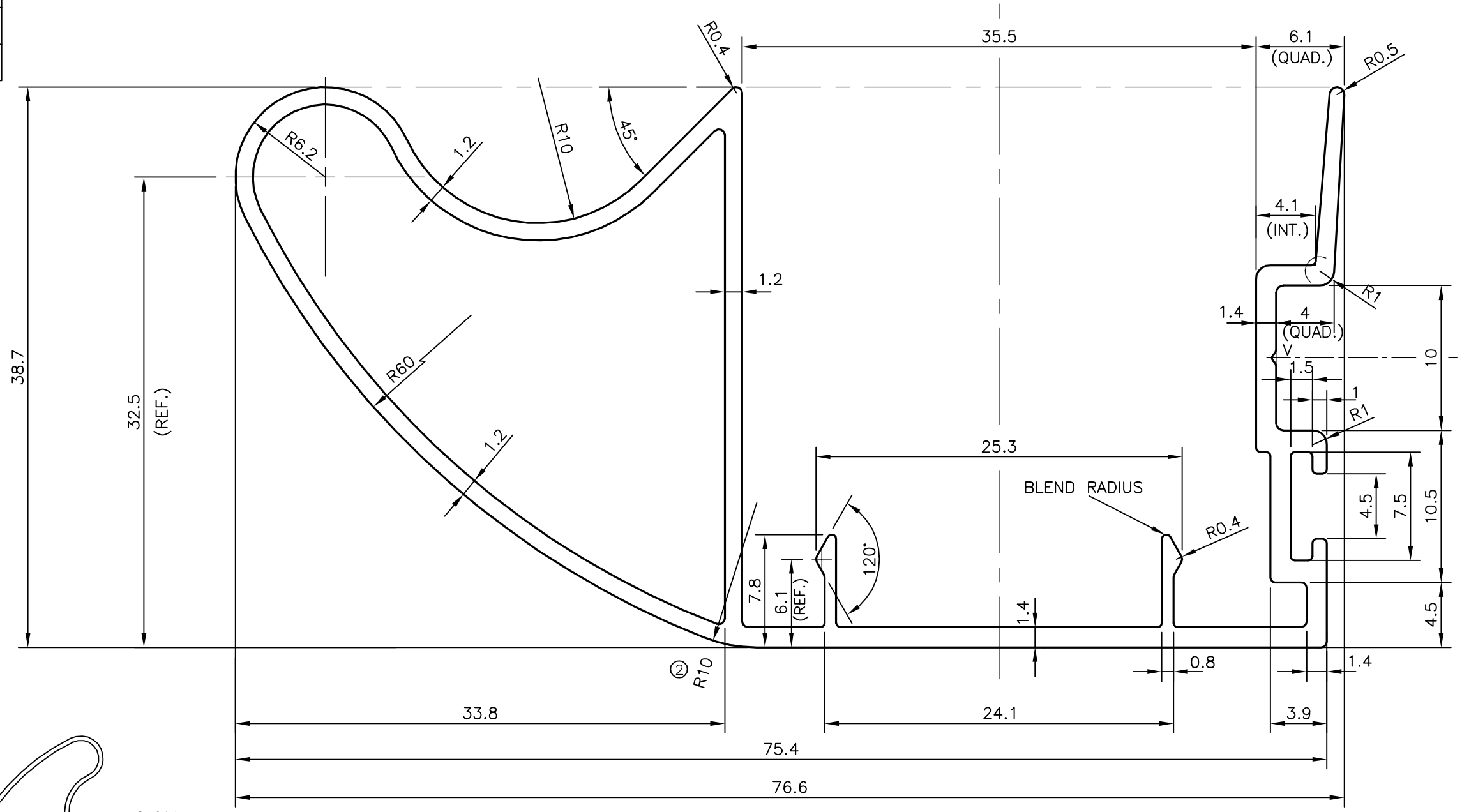

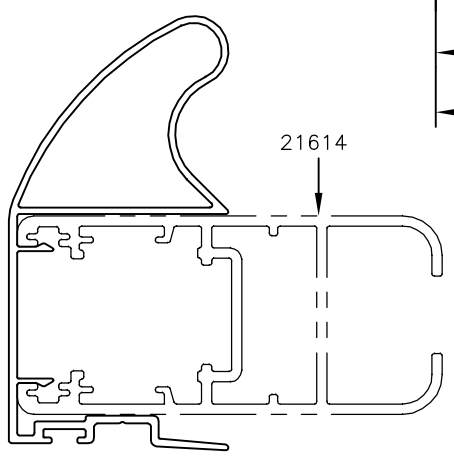

ISSUE-2

RADIUS CHANGED FROM 0.4 mm TO 10 mm

V = 0.3x90° VEE-GROOVE

SCALE 1:1

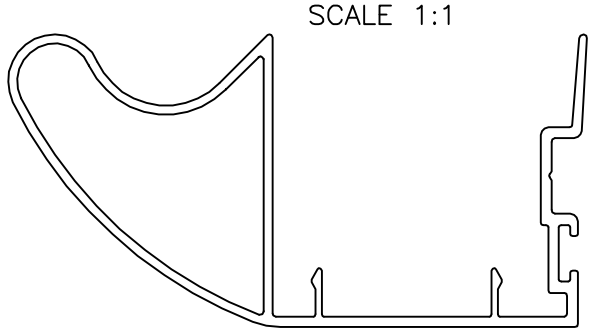

JINDAL

SYMBOL OF QUALITY
AN ISO 9001 COMPANY

JINDAL ALUMINIUM LTD.

BANGALORE-560073 (INDIA)

1. ALL DIMENSIONS ARE IN mm.
2. ROUND OFF ALL SHARP CORNERS WITH 0.40 mm.
3. TOLERANCES WILL BE AS PER IS:6477-1983 ,UNLESS OTHERWISE SPECIFIED

		NAME	DATE
DRAWN		J.P.KAUSHIK	03-09-2015
CHECKED			
APPROVED		S.S.GARG	07-09-2015
SCALE			3:1
AREA mm^2			289.224
PERIMETER mm.			335.699
WEIGHT kg/m			0.781
DRAWING No.		SECTION No.	
P-13174-1		–	
19466		19466(ISSUE-2)	

PARTY'S NAME	GENERAL CATEGORY, BANGALORE MARKET
PARTY'S DRAWING No.	AS PER DRAWING
ALLOY & TEMPER	6063 T6
DESCRIPTION	CLIP SECTION