P-13175-1
19467

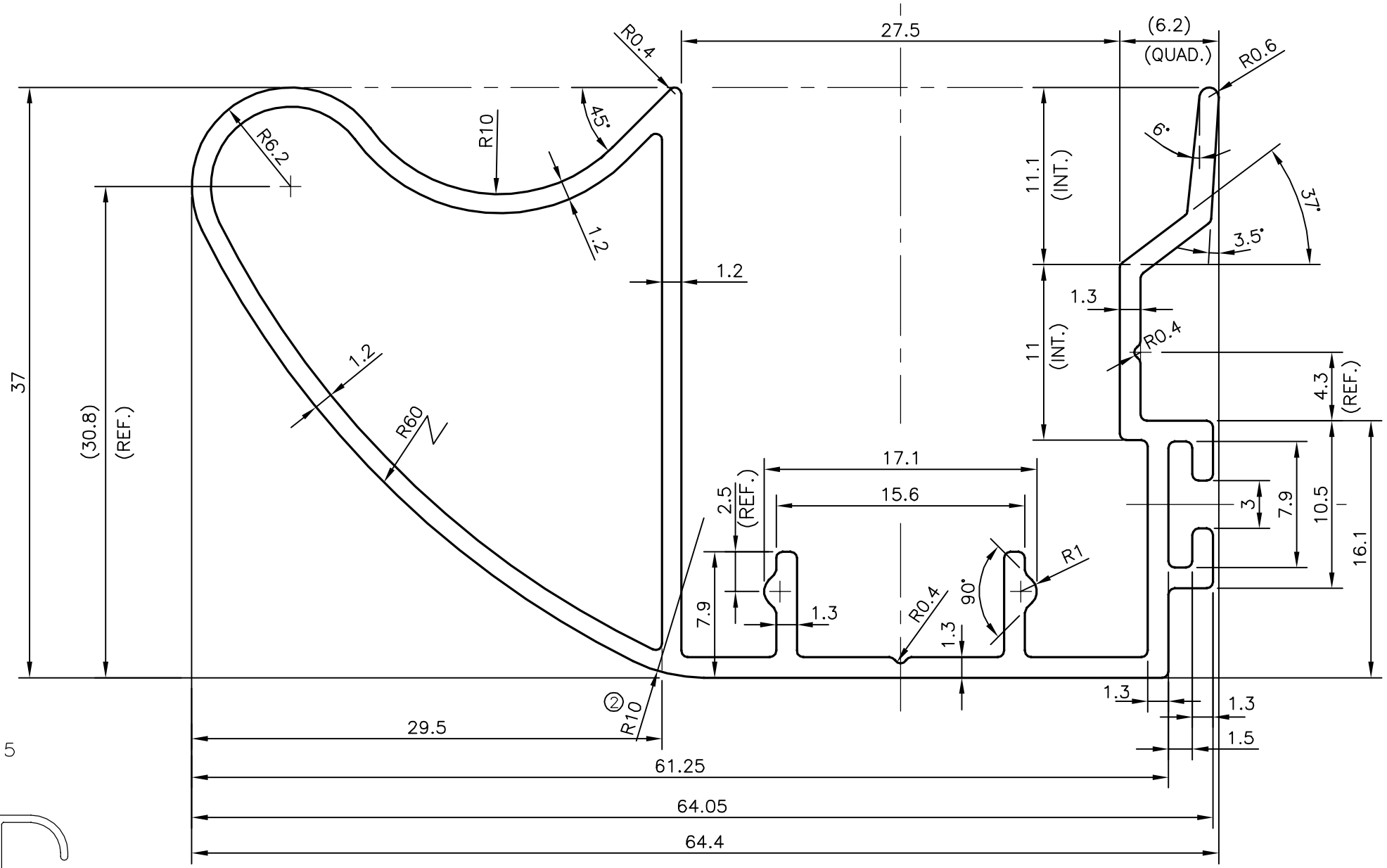

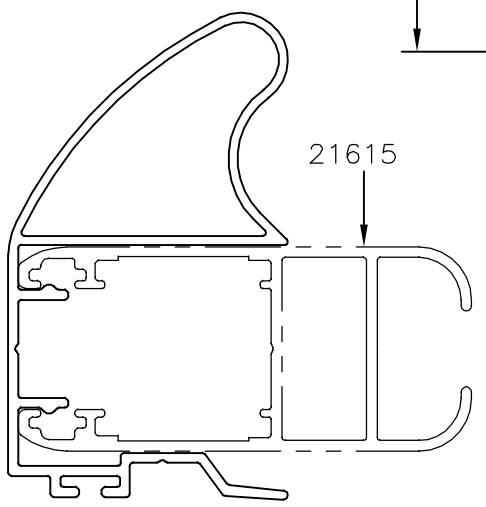

ISSUE-2

RADIUS CHANGED FROM 0.4 mm TO 10 mm

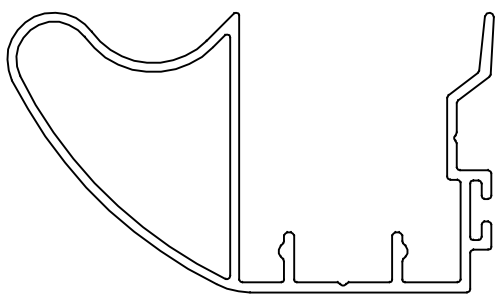

SCALE 1:1

JINDAL
SYMBOL OF QUALITY
AN ISO 9002 COMPANY

JINDAL ALUMINIUM LTD.
BANGALORE-560073 (INDIA)

1. ALL DIMENSIONS ARE IN mm.
2. ROUND OFF ALL SHARP CORNERS WITH 0.40 mm.
3. TOLERANCES WILL BE AS PER IS:6477-1983 ,UNLESS OTHERWISE SPECIFIED

PARTY'S NAME	GENERAL CATEGORY, BANGALORE MARKET
PARTY'S DRAWING No.	AS PER DRAWING
ALLOY & TEMPER	6063 T6
DESCRIPTION	CLIP SECTION

	NAME	DATE
DRAWN	J.P.KAUSHIK	03-09-2015
CHECKED		
APPROVED	S.S.GARG	07-09-2015
SCALE		3:1
AREA mm^2		262.787
PERIMETER mm.		304.816
WEIGHT kg/m		0.710

DRAWING No.	SECTION No.
P-13175-1	–
19467	19467(ISSUE-2)