P-11406-1
X1579
19479

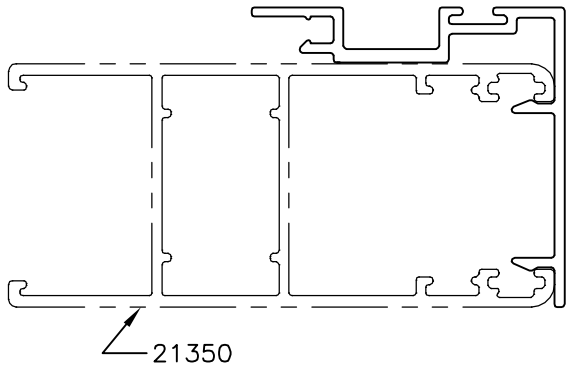

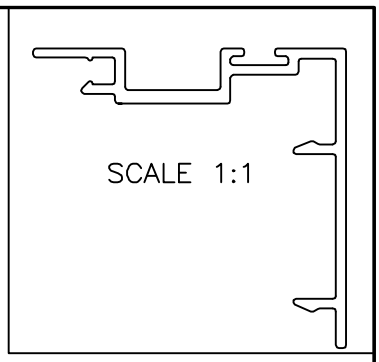

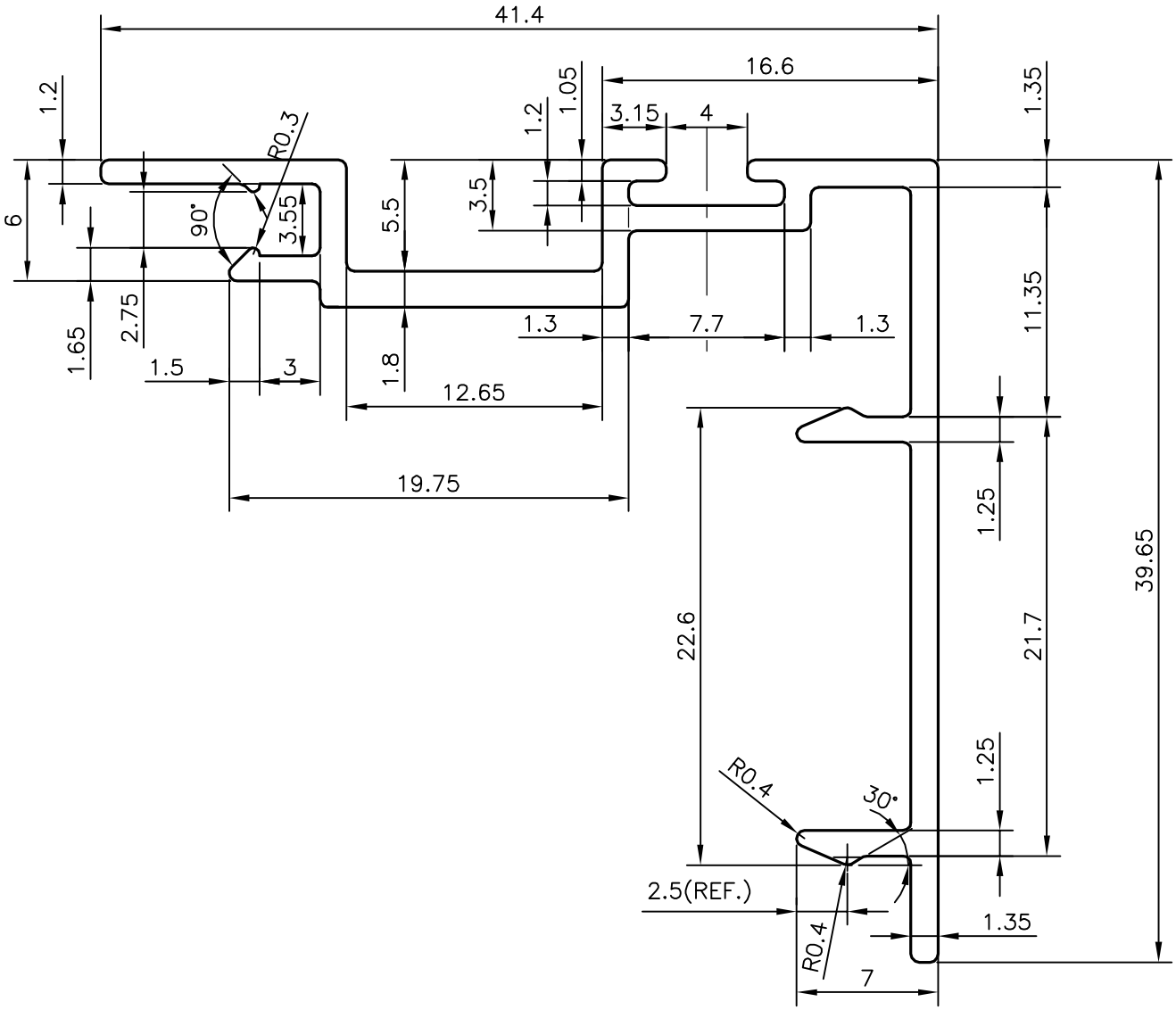

JINDAL SYMBOL OF QUALITY AN ISO 9001 COMPANY	*JINDAL ALUMINIUM LTD.* *BANGALORE-560073 (INDIA)*		NAME	DATE
		DRAWN	J.P.KAUSHIK	03-01-2012
		CHECKED		
		APPROVED	S.S. GARG	16-02-2012

1. ALL DIMENSIONS ARE IN mm.
2. ROUND OFF ALL SHARP CORNERS WITH 0.40 mm.
3. TOLERANCES WILL BE AS PER IS:3965-1981 UNLESS OTHERWISE SPECIFIED

SCALE	3:1
AREA mm^2	153.149
PERIMETER mm.	223.097
WEIGHT kg/m	0.414

PARTY'S NAME	KALPATARU ALUMINIUM PVT. LTD., MUMBAI
PARTY'S DRAWING No.	AS PER SAMPLE
ALLOY & TEMPER	HE9 WP
DESCRIPTION	GLAZING CLIP SECTION

DRAWING No.	SECTION No.
P-11406-1	–
X1579	X1579
19479	19479