P–8834
19608

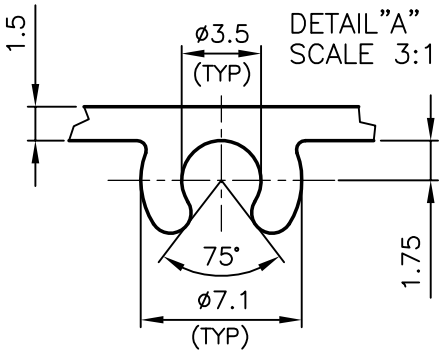

GENERAL WALL THICKNESS = 1.50mm
F = FULL RADIUS (6 PLACES)

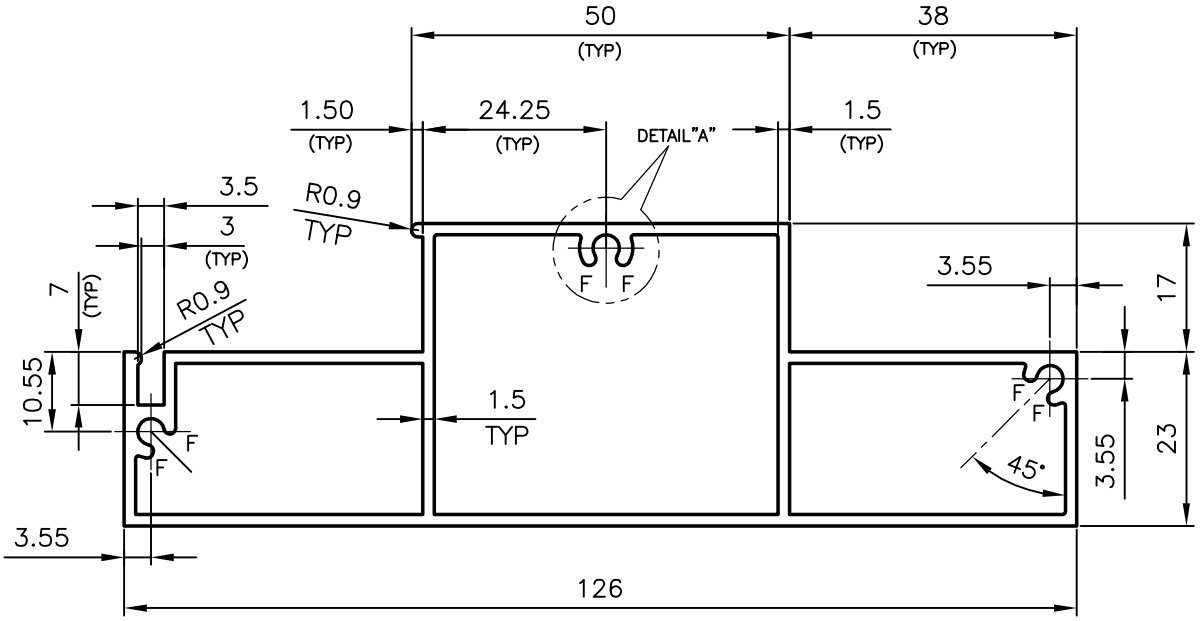

			NAME	DATE
JINDAL SYMBOL OF QUALITY AN ISO 9001 COMPANY	*JINDAL ALUMINIUM LTD.* *BANGALORE–560073 (INDIA)*	DRAWN	RAGHAVENDRA	21–11–2008
		CHECKED		
		APPROVED		

1. ALL DIMENSIONS ARE IN mm.
2. ROUND OFF ALL SHARP CORNERS WITH 0.40 mm.
3. TOLERANCES WILL BE AS PER IS:6477–1983 UNLESS OTHERWISE SPECIFIED

SCALE	1:1
AREA mm^2	602.33
PERIMETER mm.	348.534
WEIGHT kg/m	1.626

		DRAWING No.	SECTION No.
PARTY'S NAME	GENERAL CATEGORY, DELHI MARKET (RSSB)		
PARTY'S DRAWING No.	AS PER DRAWING BM–20–008 (NEW)	P–8834	–
ALLOY & TEMPER	HE9 WP	19608	19608
DESCRIPTION	WINDOW FRAME		