IAL–D–475
19685

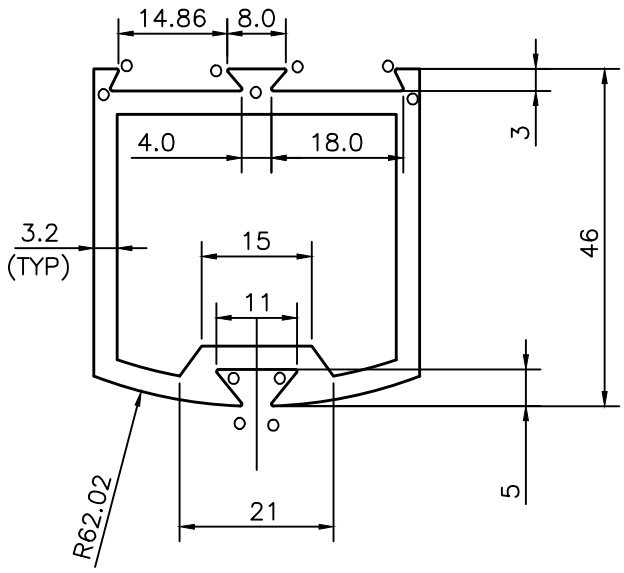

NOTE:–

O =0.25R

JINDAL SYMBOL OF QUALITY AN ISO 9001 COMPANY	*JINDAL ALUMINIUM LTD.* *BANGALORE–560073 (INDIA)*		NAME	DATE
		DRAWN	*S.K.SHARMA*	15–12–2021
		CHECKED		
		APPROVED		
1. ALL DIMENSIONS ARE IN mm. 2. ROUND OFF ALL SHARP CORNERS WITH 0.40 mm. 3. TOLERANCES WILL BE AS PER BS:EN–755–9 , UNLESS OTHERWISE SPECIFIED		SCALE		1:1
		AREA mm^2		583.0
		PERIMETER mm.		214.0
		WEIGHT kg/m		1.575
PARTY'S NAME	MARKET	DRAWING No.	SECTION No.	
PARTY'S DRAWING No.	AS PER DRAWING	IAL–D–475	–	
ALLOY & TEMPER	6063–T6	19685	19685	
DESCRIPTION	DOOR SECTION			