P–5617	
20118	

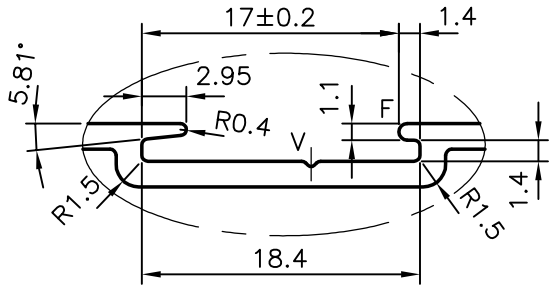

DETAIL–A

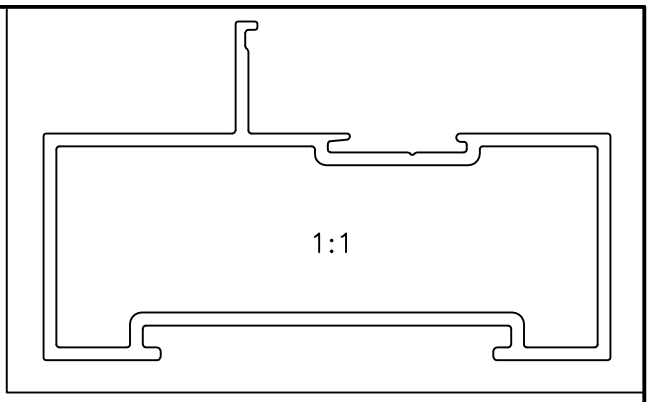

GENERAL WALL THICKNESS = 1.7 mm

F = FULL RADIUS (1 PLACE)

V = 0.35x90xR0.3

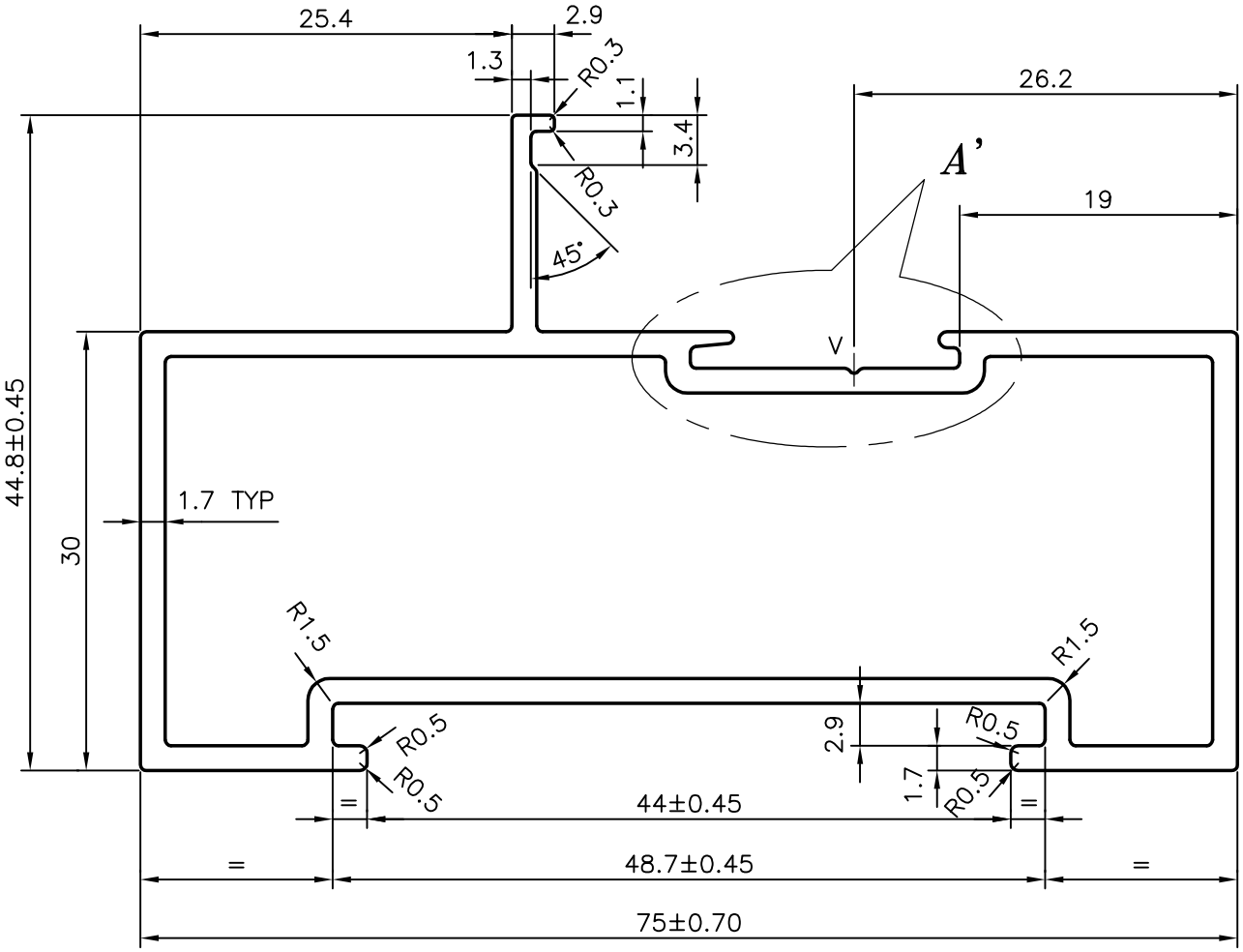

			NAME	DATE
SYMBOL OF QUALITY AN ISO 9001 COMPANY	*JINDAL ALUMINIUM LTD.* *BANGALORE–560073 (INDIA)*	DRAWN	MALINGAPPA	25–06–2005
		CHECKED		
		APPROVED		

1. ALL DIMENSIONS ARE IN mm.
2. ROUND OFF ALL SHARP CORNERS WITH 0.40 mm.
3. TOLERANCES WILL BE AS PER IS:6477–1983 UNLESS OTHERWISE SPECIFIED

SCALE	2:1
AREA mm^2	405.179
PERIMETER mm.	270.214
WEIGHT kg/m	1.094

PARTY'S NAME	STAR GLASS ALUMINIUM C.C., SOUTH AFRICA
PARTY'S DRAWING No.	44084
ALLOY & TEMPER	6063 T5
DESCRIPTION	ARCHITECTURAL SECTION

DRAWING No.	
P–5617	–
20118	20118