X142
4941
20379

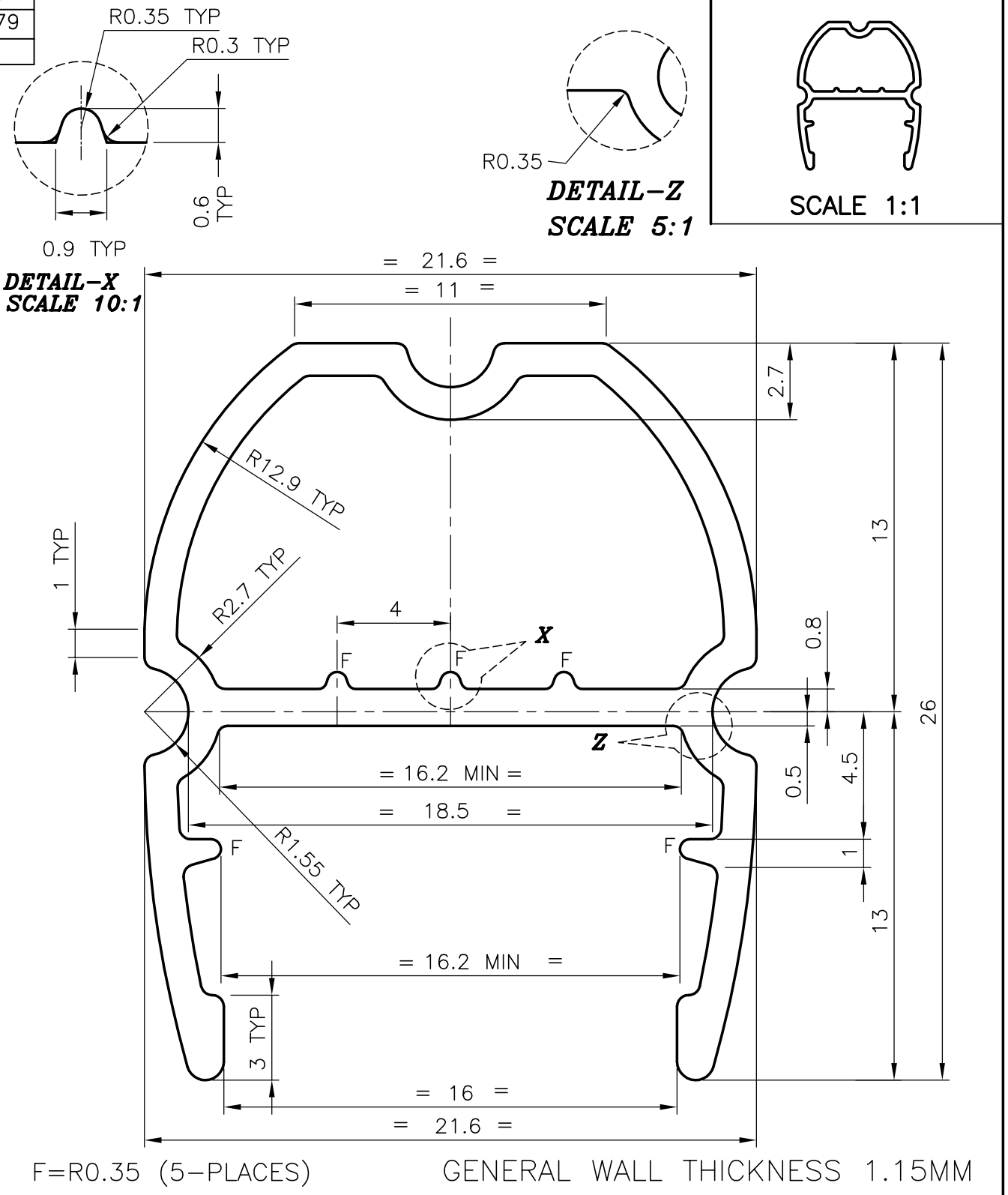

F=R0.35 (5–PLACES) GENERAL WALL THICKNESS 1.15MM

JINDAL SYMBOL OF QUALITY AN ISO 9002 COMPANY	**JINDAL ALUMINIUM LTD.** **BANGALORE–560073 (INDIA)**		NAME	DATE
		DRAWN	RANGASWAMY	21–10–2K
		CHECKED		
1. ALL DIMENSIONS ARE IN mm. 2. ROUND OFF ALL SHARP CORNERS WITH 0.40 mm. 3. TOLERANCES WILL BE AS PER I.S. 6477–1983 UNLESS OTHERWISE SPECIFIED		APPROVED		
		SCALE	5:1	
PARTY'S NAME	ALKOSIGN DISPLAY SYSTEMS, BOMBAY	WEIGHT kg/m	0.286	
PARTY'S DRAWING No.	AS PER DRAWING	SECTION No.	20379	
ALLOY & TEMPER	HE9 WP	DRAWING No.	20379	
DESCRIPTION	MISCELLANEOUS TUBE			