P-4963-5
20458

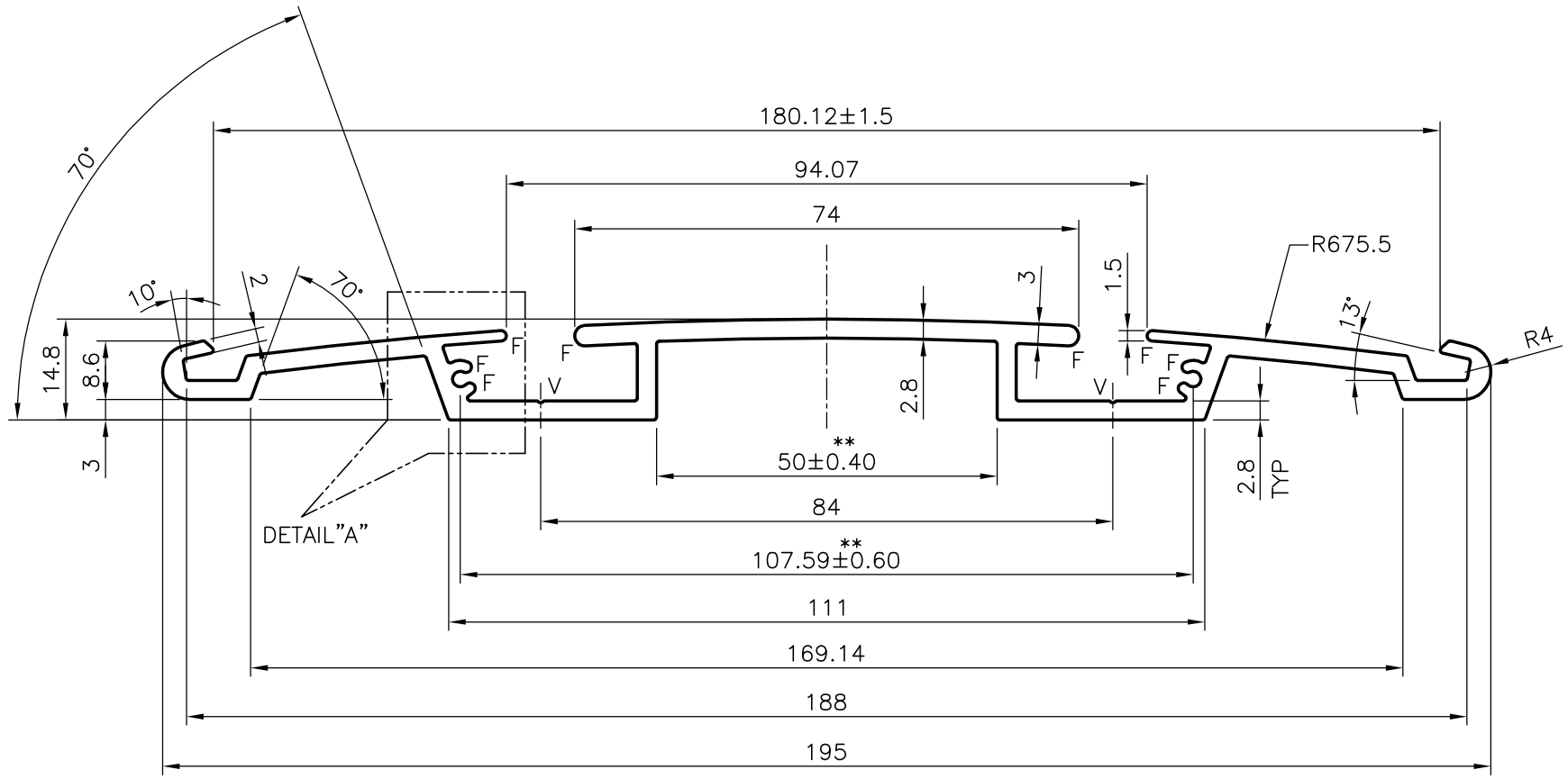

** = CRITICAL DIMENSIONS TO MATCH WITH PARTYS PLASTIC SAMPLE
F = FULL RADIUS (8 PLACES)
GENERAL WALL THICKNESS = 2.80mm
V = VEE GROOVE 0.30x90° (2 PLACES)

DETAIL"A"
SCALE 3:1

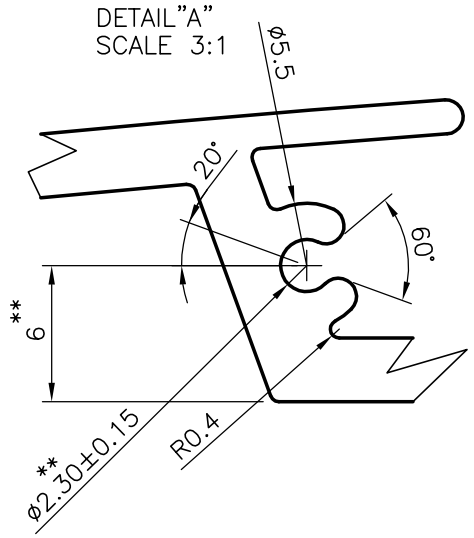

JINDAL SYMBOL OF QUALITY AN ISO 9001 COMPANY	*JINDAL ALUMINIUM LTD.* *BANGALORE-560073 (INDIA)*		NAME	DATE
		DRAWN	RAGHAVENDRA	03-06-2005
		CHECKED		
		APPROVED		
1. ALL DIMENSIONS ARE IN mm. 2. ROUND OFF ALL SHARP CORNERS WITH 0.40 mm. 3. TOLERANCES WILL BE AS PER BS:1474-1987 UNLESS OTHERWISE SPECIFIED		SCALE		1:1
		AREA mm^2		797.957
		PERIMETER mm.		592.613
		WEIGHT kg/m		2.154
PARTY'S NAME	JOSEPH INDUSTRIES, DUBAI	DRAWING No.		SECTION No.
PARTY'S DRAWING No.	AS PER SAMPLE & AS PER REQUIREMENT	P-4963-5		-
ALLOY & TEMPER	6063 T6	20458		20458
DESCRIPTION	DISPLAY SECTION			