8684
11889
20616

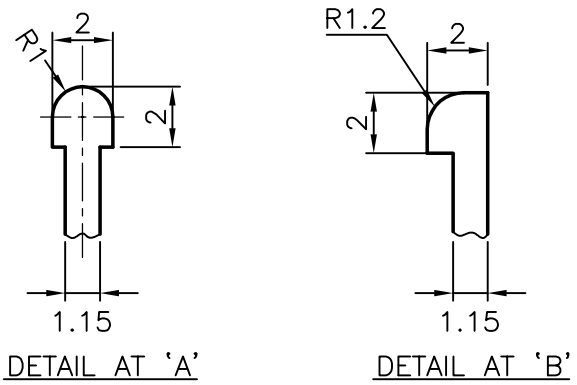

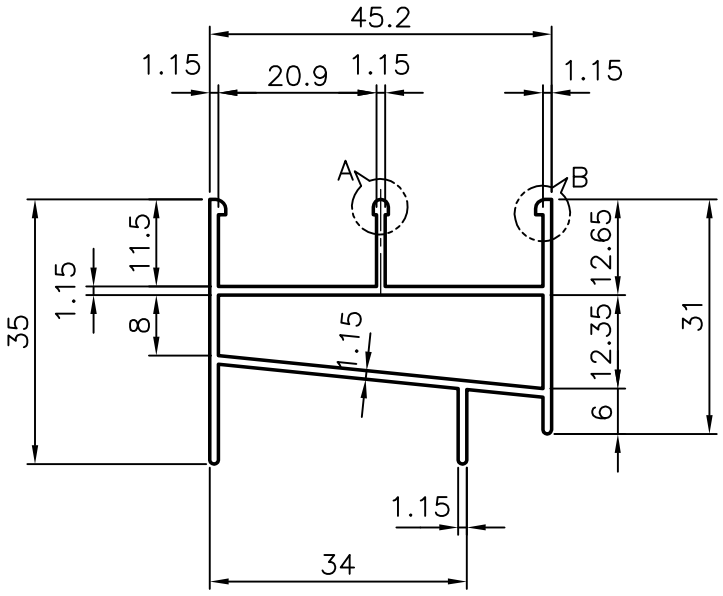

JINDAL SYMBOL OF QUALITY AN ISO 9002 COMPANY	*JINDAL ALUMINIUM LTD.* *BANGALORE–560073 (INDIA)*				NAME	DATE
				DRAWN	R.D.SHARMA	29–1–83
				CHECKED		
1. ALL DIMENSIONS ARE IN mm 2. ROUND OFF SHARP CORNERS WITH 0.4mm R 3. TOLERANCES WILL BE AS PER IS : 6477–1983				APPROVED		
				SCALE	1:1 & 4:1	
PARTY'S NAME	–			WEIGHT kg/m	0.546	
PARTY'S DRAWING No.	–	FINISH	–	SECTION No.	20616	
ALLOY & TEMPER	HE 9 WP	LENGTH:	3658mm	DRAWING No.		
DESCRIPTION	WINDOW SECTION			20616		