8712
11825
20641

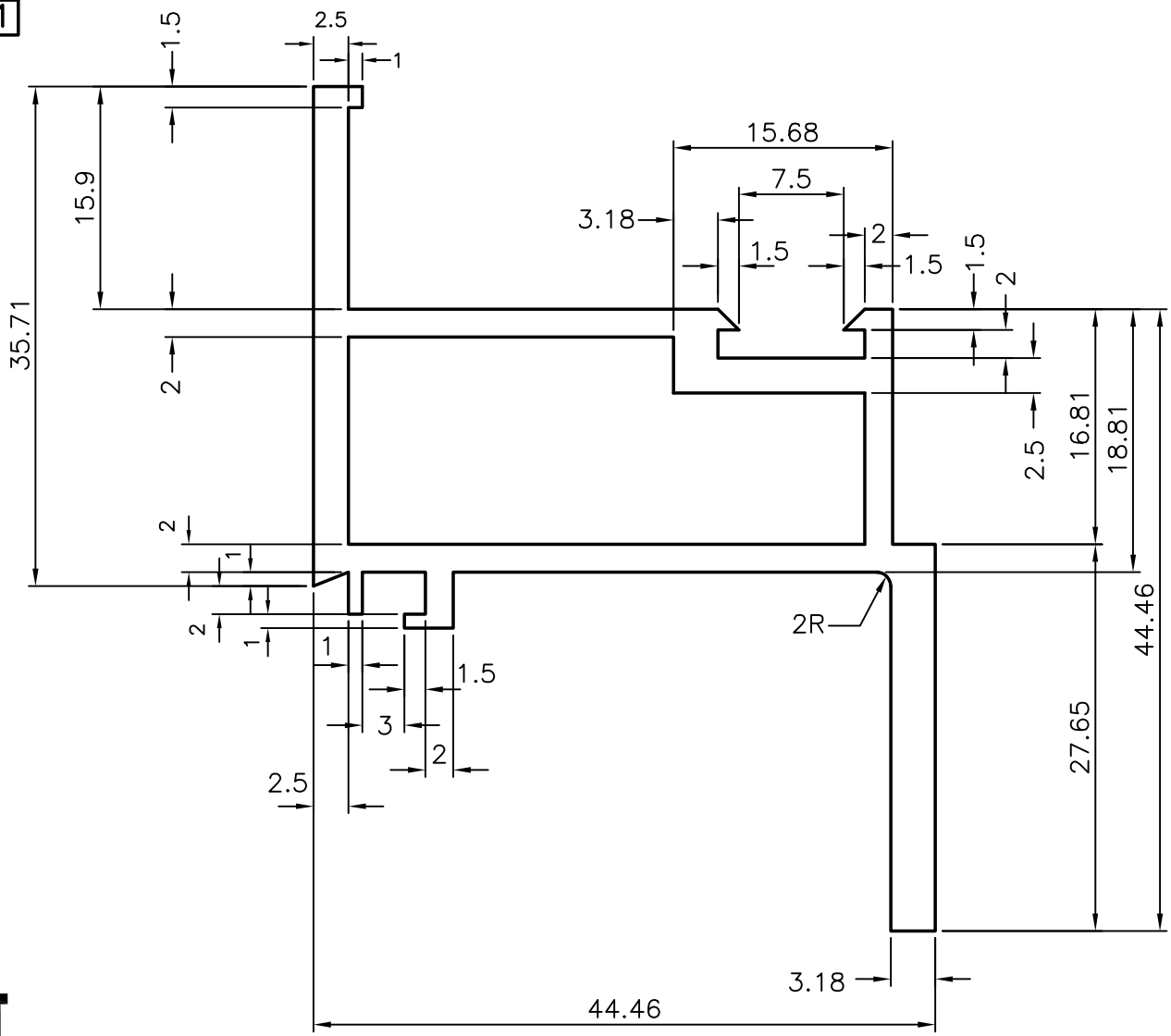

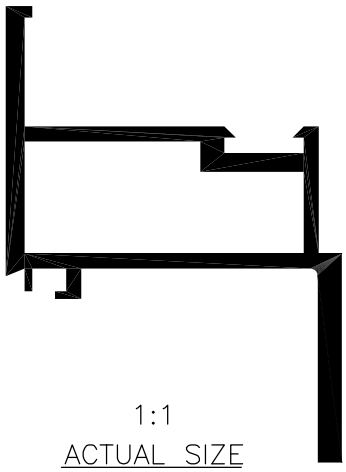

1:1
ACTUAL SIZE

					NAME	DATE
JINDAL SYMBOL OF QUALITY AN ISO 9002 COMPANY	***JINDAL ALUMINIUM LTD.*** ***BANGALORE–560073 (INDIA)***			DRAWN	S.P.SHARMA	12–9–84
1. TOLERANCES WILL BE AS PER I.S.6477–1983 2. ALL DIMENSIONS ARE IN MM 3. ROUND OF SHARP CORNERS WITH 0.4 MM R				CHECKED		
				APPROVED		
PARTY'S NAME	–			SCALE	2:1	
				WEIGHT kg/m	1.072	
PARTY'S DRAWING No.	MH/117	FINISH	AS EXTRUDED	SECTION No.	~~XXX~~ 20641	
ALLOY & TEMPER	HE9WP	LENGTH:	3658 mm.	DRAWING No.	~~XXX~~ 20641	
DESCRIPTION	WINDOW SECTION					