| |
|---|
| 8783 |
| 12209 |
| 20703 |

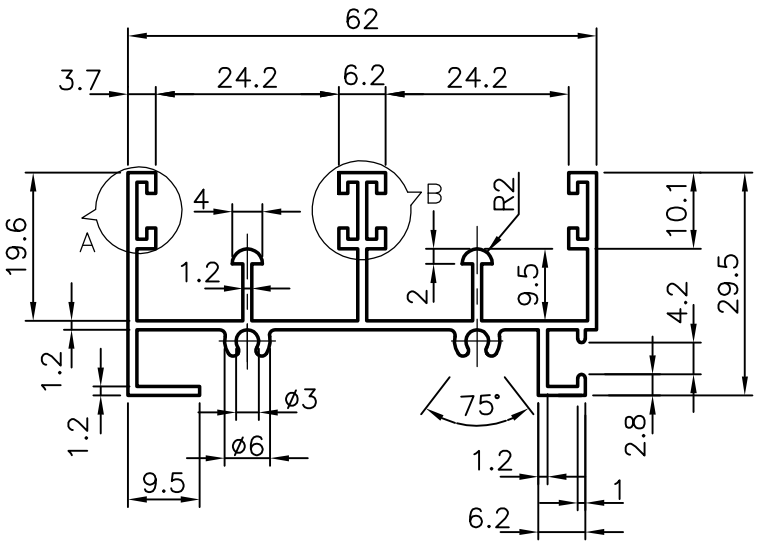


GEN. WALL THICKNESS:–1.2mm

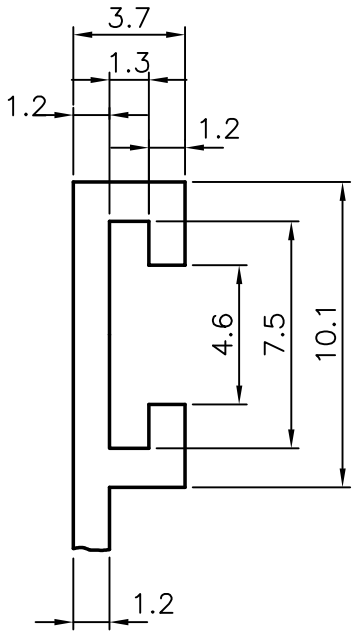


DETAIL AT 'A'

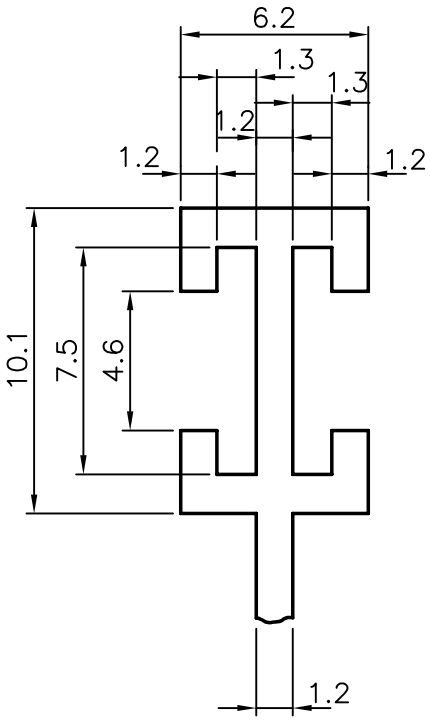


DETAIL AT 'B'

| | | | | | | |
|---|---|---|---|---|---|---|
| JINDAL<br>SYMBOL OF QUALITY<br>AN ISO 9002 COMPANY | ***JINDAL ALUMINIUM LTD.***<br>***BANGALORE–560073 (INDIA)*** | | | | NAME | DATE |
| | | | | DRAWN | R.D.SHARMA | |
| 1. ALL DIMENSIONS ARE IN mm.<br>2. ROUND OFF SHARP CORNERS WITH 0.4mm R.<br>3. TOLERANCES WILL BE AS PER IS: 3965–1981 | | | | CHECKED | | |
| | | | | APPROVED | | |
| PARTY'S NAME | | | | SCALE | 1:1 & 4:1 | |
| | | | | WEIGHT kg/m | 0.726 | |
| PARTY'S DRAWING No. | – | FINISH | | SECTION No. | 20703 | |
| ALLOY & TEMPER | HE 9 WP | LENGTH: | 3658mm | DRAWING No. | 20703 | |
| DESCRIPTION | WINDOW SECTION | | | | | |