8813
12491
20729

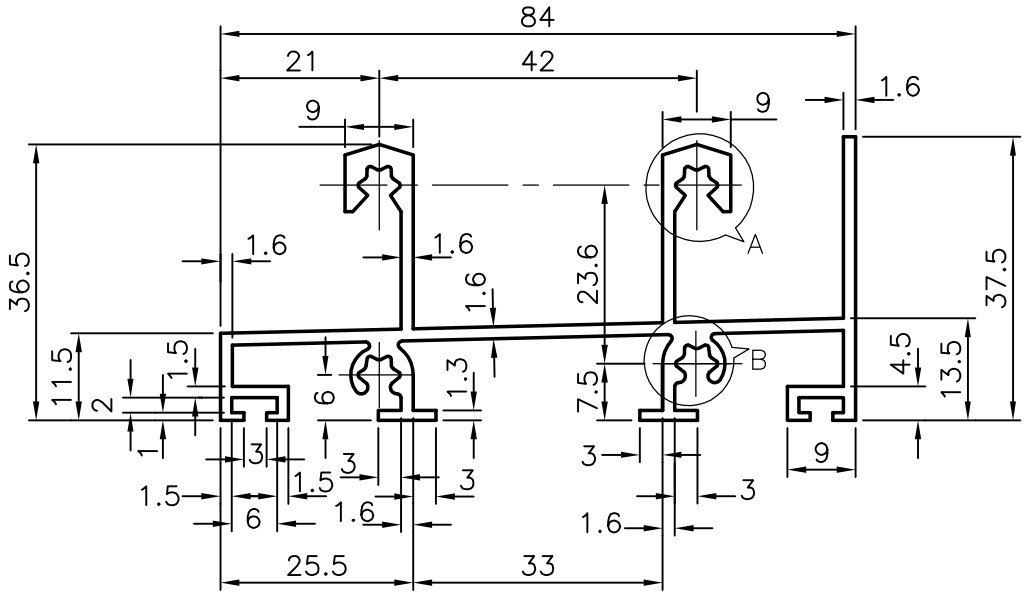

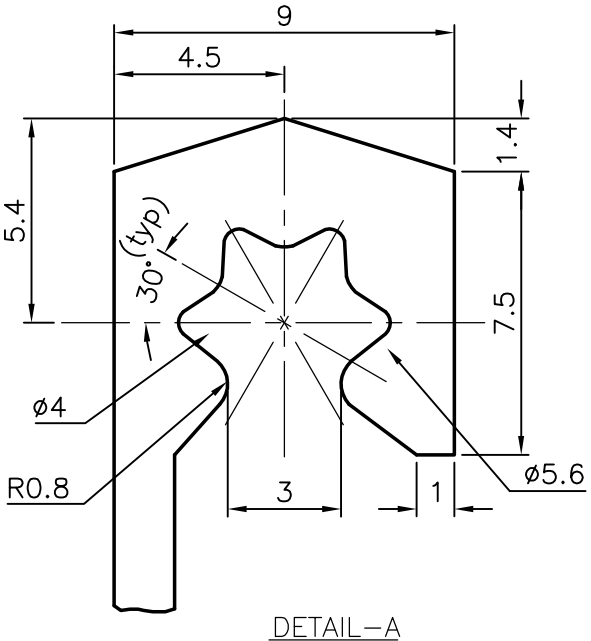

DETAIL–A

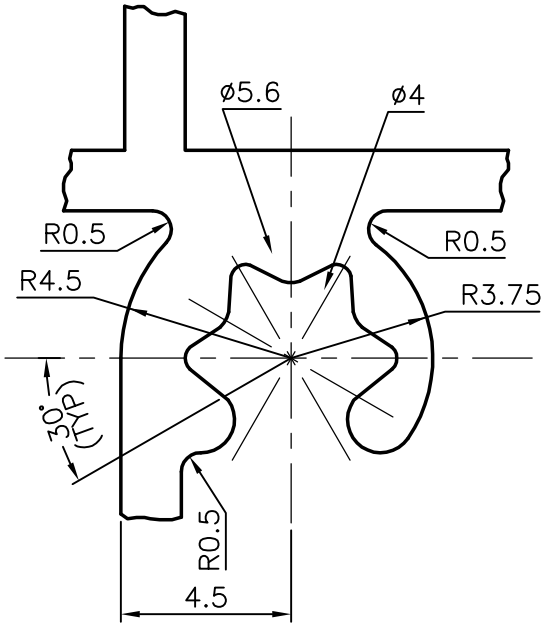

DETAIL–B

1. TOLERANCES ON DIMENSIONS, STRAIGHTNESS, FLATNESS, TWIST & ANGULARITY WILL BE AS PER IS: 3965–1981
2. SAMPLE APPROVAL:– NOT NECESSARY

JINDAL SYMBOL OF QUALITY AN ISO 9002 COMPANY	***JINDAL ALUMINIUM LTD.*** ***BANGALORE–560073 (INDIA)***				NAME / DATE
1. ALL DIMENSIONS ARE IN mm 2. ROUND OFF SHARP CORNERS WITH 0.4mm R 3.				DRAWN	R.D.SHARMA
				CHECKED	
				APPROVED	
				SCALE	1:1 & 5:1
PARTY'S NAME	AJIT INDIA (MADRAS) PVT.LTD., MADRAS			WEIGHT kg/m	1.305
PARTY'S DRAWING No.	GK/2	FINISH		SECTION No.	XXX 20729
ALLOY & TEMPER	HE 9 WP	LENGTH:	4000mm	DRAWING No.	XXX 20729
DESCRIPTION	WINDOW SECTION				