8821
12011
20737

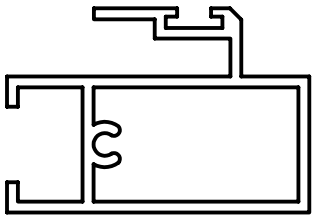

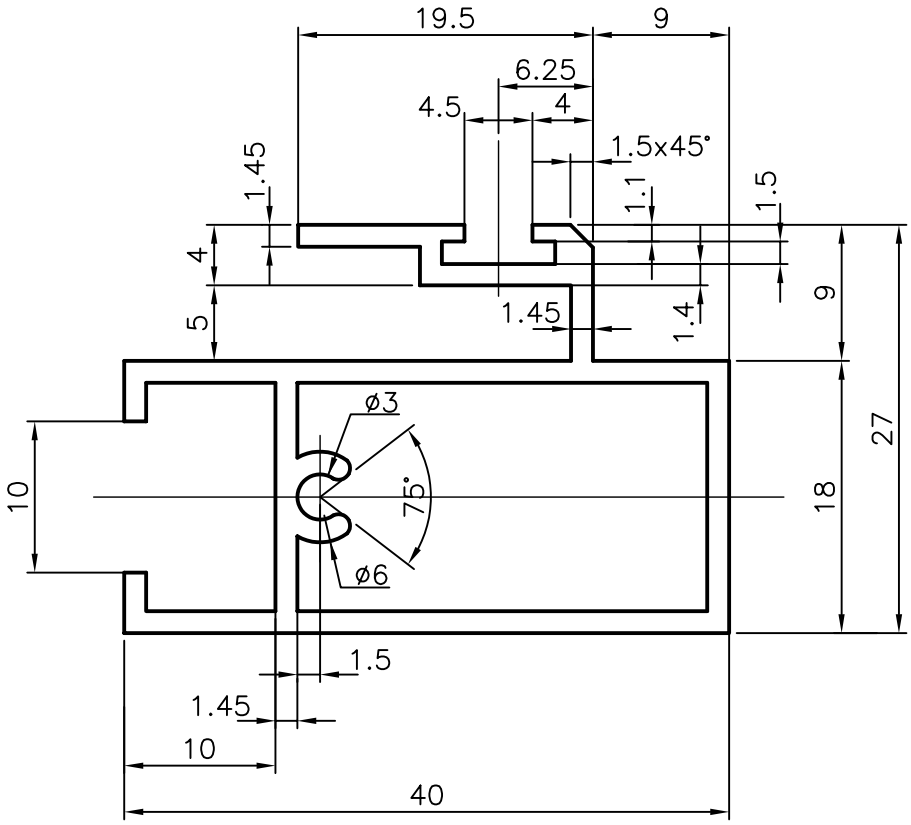

NOTE:–

1. (12' LONG) NO. OF PIECES IN 100 kgs: 45 NOS. (AVERAGE)
2. GENERAL WALL THICKNESS: 1.45mm. UNLESS OTHERWISE SPECIFIED.
3. SAMPLE APPROVAL: Not Necessary.

JINDAL SYMBOL OF QUALITY AN ISO 9002 COMPANY	**JINDAL ALUMINIUM LTD.** **BANGALORE–560073 (INDIA)**				NAME	DATE
				DRAWN	R.D.Sharma	15.5.93
1. All dimensions are in mm. 2. Round off all sharp corners with 0.4mm R. 3. Tolerances will be as per IS: 6477–1983, Unless othewise specified.				CHECKED		
				APPROVED		
PARTY'S NAME				SCALE	2:1	
				WEIGHT kg/m	0.607	
PARTY'S DRAWING No.		FINISH		SECTION No.	~~8821~~ 20737	
ALLOY & TEMPER	HE 9 WP	LENGTH:	3658mm.	DRAWING No.		
DESCRIPTION	WINDOW SECTION			~~8821~~	20737	