8835
12496
20748

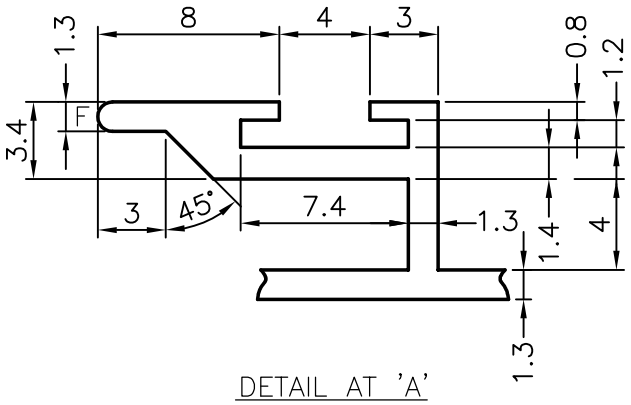

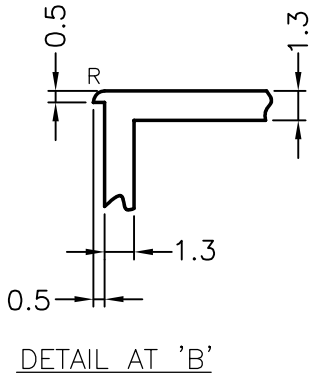

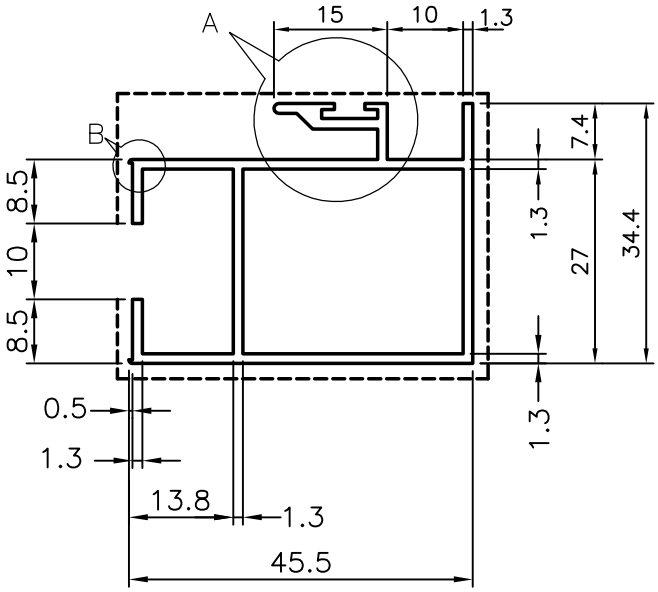

1. F – FULL RADIUS (1)
2. R – 0.5 mm RADIUS (2)
3. ------ EXPOSED SURFACE
4. GENERAL WALL THICKNESS : 1.30 mm.

JINDAL SYMBOL OF QUALITY AN ISO 9002 COMPANY	***JINDAL ALUMINIUM LTD.*** ***BANGALORE–560073 (INDIA)***			NAME / DATE
1. All dimensions are in mm. 2. Round off all sharp corners with 0.4R. 3. Tolerances will be as per IS: 6477–1983			DRAWN	R.D.SHARMA 31.7.93
			CHECKED	
			APPROVED	
			SCALE	1:1 & 3:1
PARTY'S NAME	WHITE ALUMINIUM EST., ABU DHABI		WEIGHT kg/m	0.660
PARTY'S DRAWING No.	85–5–29		SECTION No.	~~8835~~ 20748
ALLOY & TEMPER	HE9WP	LENGTH: 5970 mm.	DRAWING No.	~~8835~~ 20748
DESCRIPTION	WINDOW SECTION			