8900
12067
20804

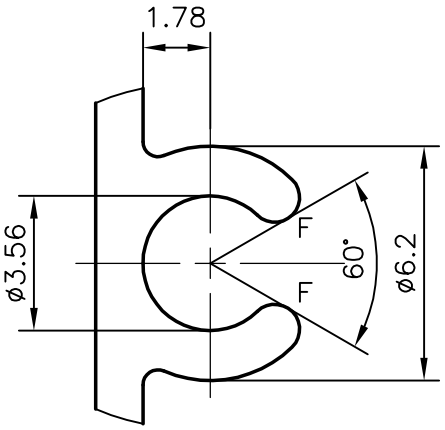

A =2x
(5:1)

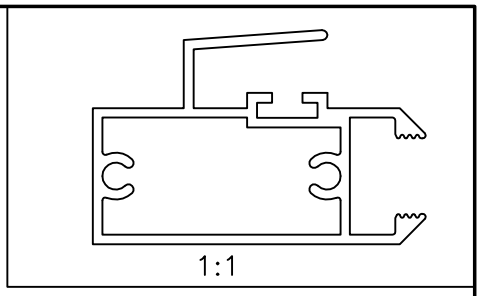

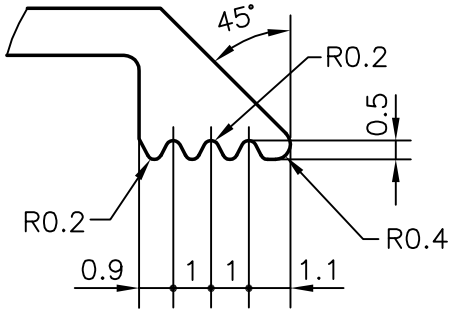

B =2x
(5:1)

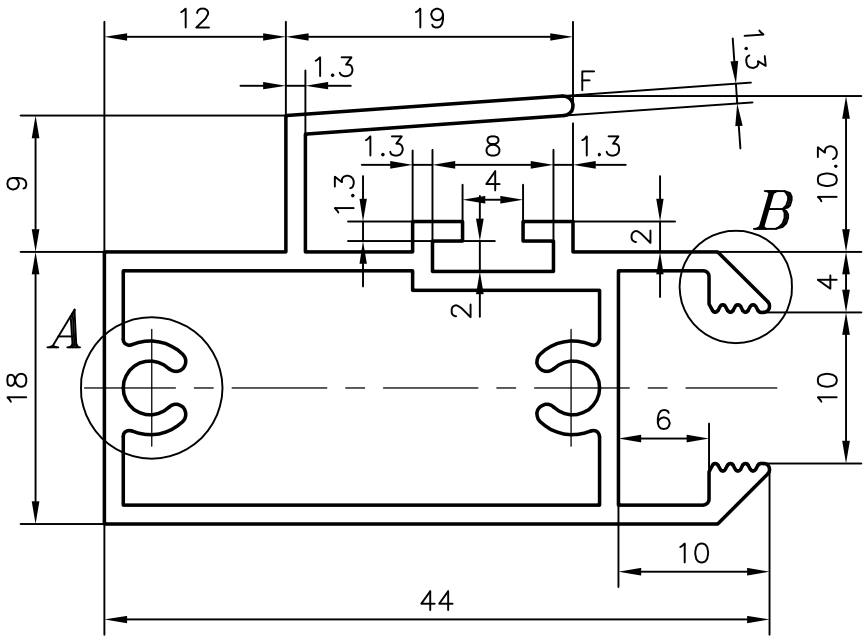

1. GENERAL WALL THICKNESS:– 1.25 mm., UNLESS OTHERWISE SPECIFIED
2. F =FULL RADIUS(5)

JINDAL ALUMINIUM LTD.

BANGALORE–560073

1. ALL DIMENSIONS ARE IN mm.
2. ROUND OFF ALL SHARP CORNERS WITH 0.4 mm.
3. TOLERANCES WILL BE AS PER IS: 6477–1983 ,UNLESS OTHERWISE SPECIFIED

	NAME	DATE
DRAWN	R.D.Sharma	26–06–96
CHECKED		
APPROVED		

PARTY'S NAME	L.B.P. TRADING CORPORATION, MUMBAI
PARTY'S DRAWING No.	AS PER SAMPLE
ALLOY & TEMPER	HE9 WP
LENGTH	3658 mm.
DESCRIPTION	WINDOW SECTION

SCALE	1:1,2:1&5:1
WEIGHT kg/m	0.626
SECTION No.	20804
DRAWING No.	20804