9313
12556
20909

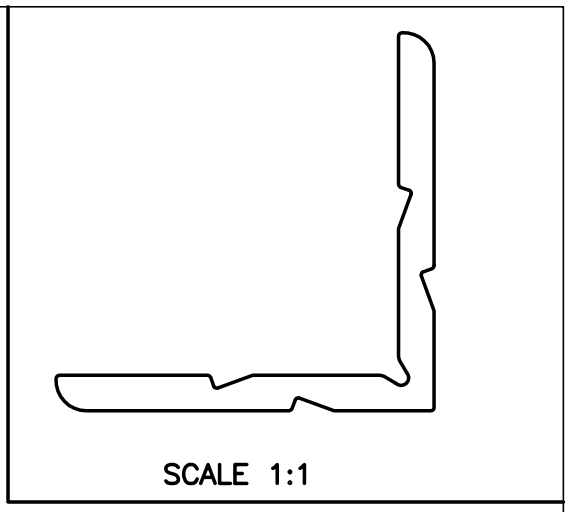

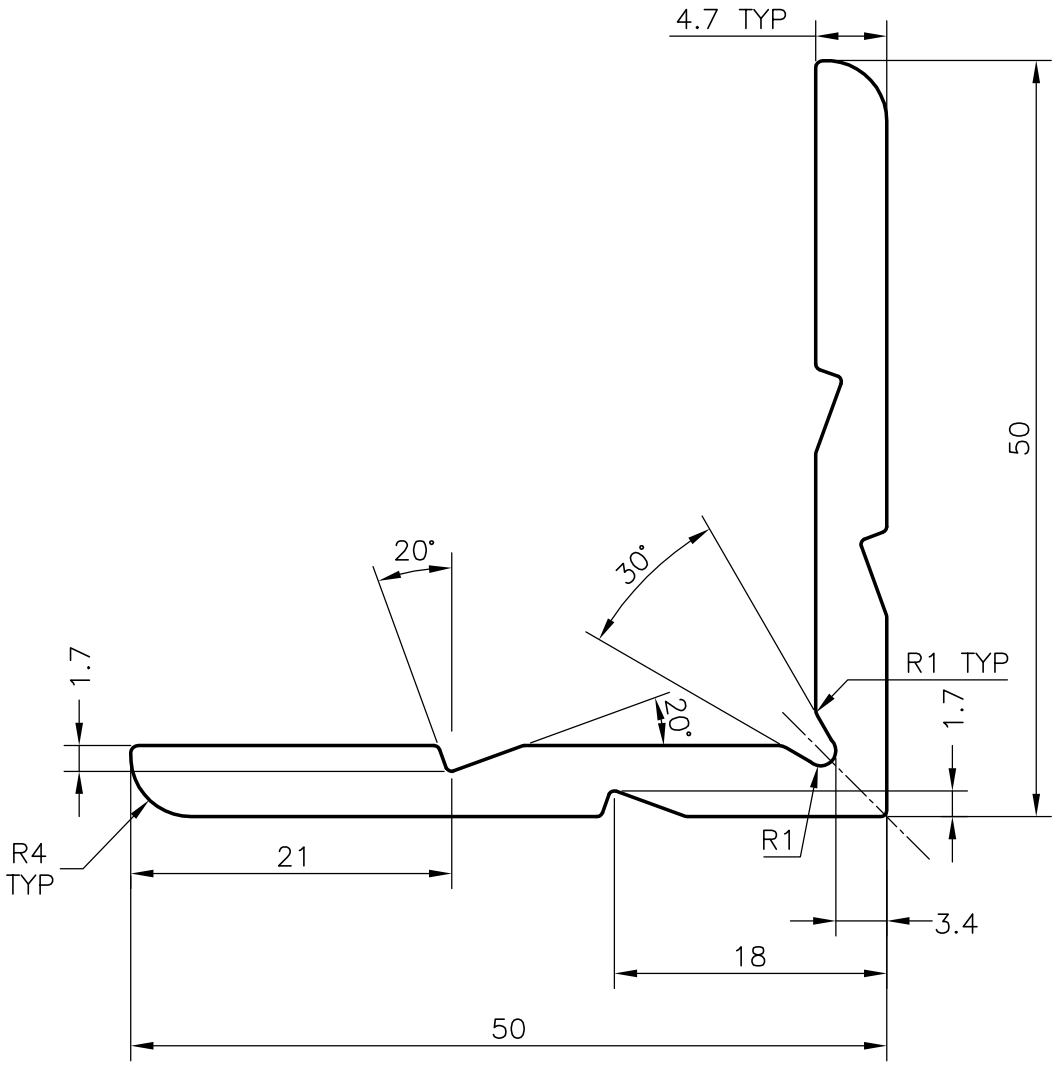

JINDAL SYMBOL OF QUALITY AN ISO 9002 COMPANY	*JINDAL ALUMINIUM LTD.* *BANGALORE–560073 (INDIA)*		NAME	DATE
		DRAWN	RANGASWAMY	15–02–01
		CHECKED		
1. ALL DIMENSIONS ARE IN mm. 2. ROUND OFF ALL SHARP CORNERS WITH 0.40 mm. 3. TOLERANCES WILL BE AS PER I.S 3965–1981 UNLESS OTHERWISE SPECIFIED		APPROVED		
		SCALE	2:1 & 1:1	
PARTY'S NAME	GENERAL CATEGORY .,CALCUTTA MARKET	WEIGHT kg/m	1.123	
PARTY'S DRAWING No.	AS PER SAMPLE (2081)	SECTION No.	20909	
ALLOY & TEMPER	HE9 WP	DRAWING No.		
DESCRIPTION	WINDOW SECTION	20909		