| |
|---|
| 9343 |
| 12254 |
| 20939 |

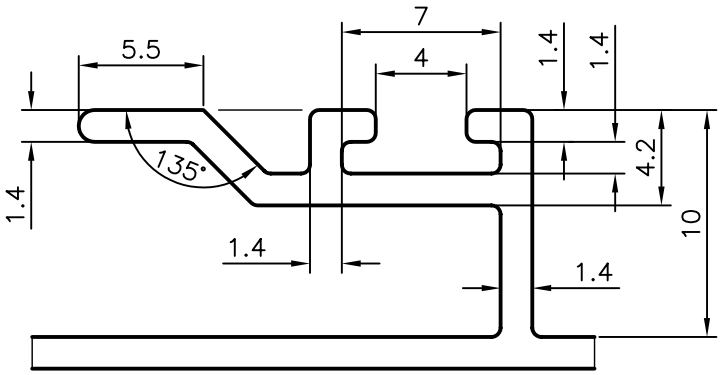


*DETAIL–A*
SCALE:– 3:1

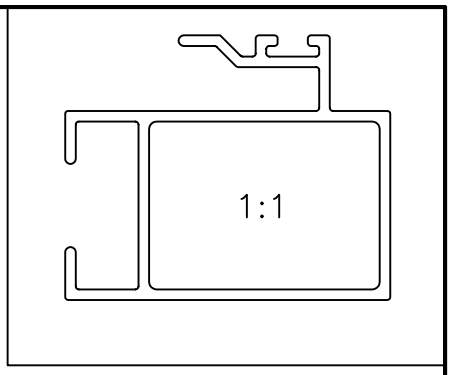


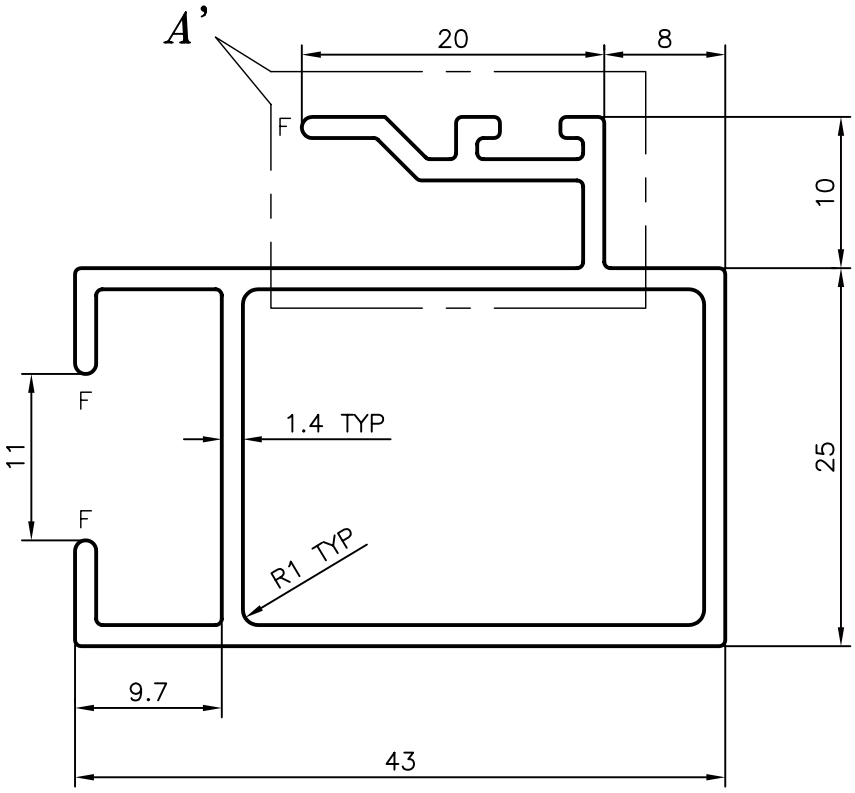


GENERAL WALL THICKNESS = 1.40 mm
F = FULL RADII (3 PLACES)
NO. OF PIECES IN 100 kgs:– 40 (AVERAGE)

SYMBOL OF QUALITY
AN ISO 9001 COMPANY

**JINDAL ALUMINIUM LTD.**
*BANGALORE–560073 (INDIA)*

| | NAME | DATE |
|---|---|---|
| DRAWN | MALINGAPPA | 05–10–2005 |
| CHECKED | | |
| APPROVED | | |

1. ALL DIMENSIONS ARE IN mm.
2. ROUND OFF ALL SHARP CORNERS WITH 0.50 mm.
3. TOLERANCES WILL BE AS PER IS:6477–1983 UNLESS OTHERWISE SPECIFIED

| | |
|---|---|
| SCALE | 2:1 |
| AREA $mm^2$ | 248.323 |
| PERIMETER mm. | 243.288 |
| WEIGHT kg/m | 0.678 |

| | |
|---|---|
| PARTY'S NAME | – |
| PARTY'S DRAWING No. | LIGHTER SECTION OF 4717 |
| ALLOY & TEMPER | HE9 WP |
| DESCRIPTION | WINDOW SECTION |

| DRAWING No. | SECTION No. |
|---|---|
| 9343 | 9343 |
| 12254 | 12254 |
| 20939 | 20939 |