P-3776
9380
12219
20975

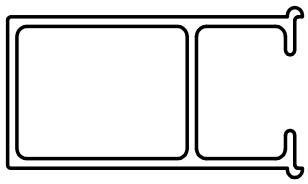

SCALE 1:1

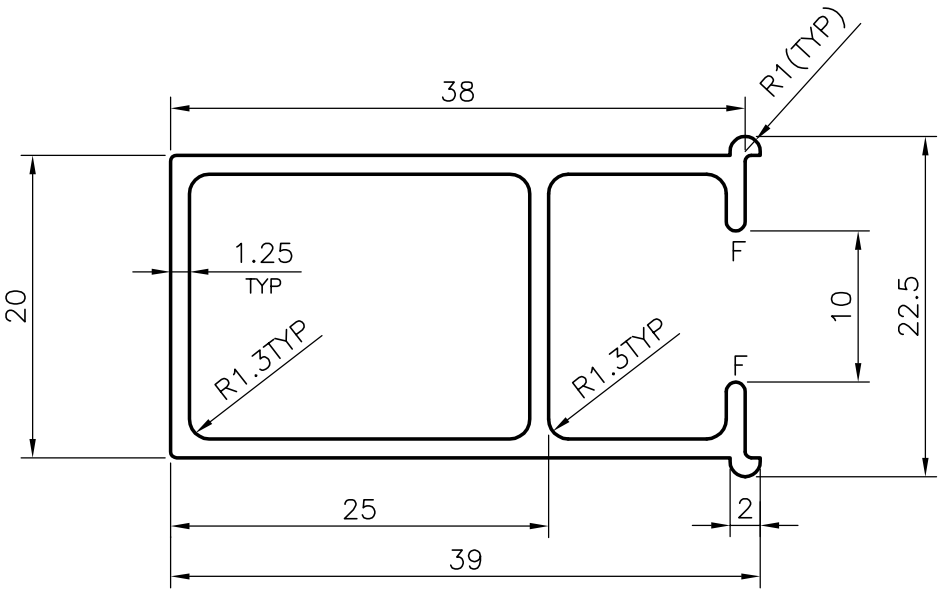

1. GENERAL WALL THICKNESS = 1.25mm
2. F = FULL RADII (2 PLACES)
3. FOR 12 FEET LENGTH WEIGHT = 1.529 kg

JINDAL

SYMBOL OF QUALITY
AN ISO 9002 COMPANY

JINDAL ALUMINIUM LTD.

BANGALORE-560073 (INDIA)

1. ALL DIMENSIONS ARE IN mm.
2. ROUND OFF ALL SHARP CORNERS WITH 0.40 mm.
3. TOLERANCES WILL BE AS PER IS 6477-1983 UNLESS OTHERWISE SPECIFIED

	NAME	DATE
DRAWN	RAGHAVENDRA	11-02-02
CHECKED		
APPROVED		

SCALE	2:1 & 1:1
AREA mm^2	154.83
PERIMETER	160.29mm
WEIGHT kg/m	0.418
SECTION No.	20975
DRAWING No.	20975

PARTY'S NAME	GENERAL CATEGORY,. CALCUTTA MARKET
PARTY'S DRAWING No.	LIGHTER SECTION OF 8791
ALLOY & TEMPER	HE9 WP
DESCRIPTION	WINDOW SECTION