P-3305-1
X180
9414
21009

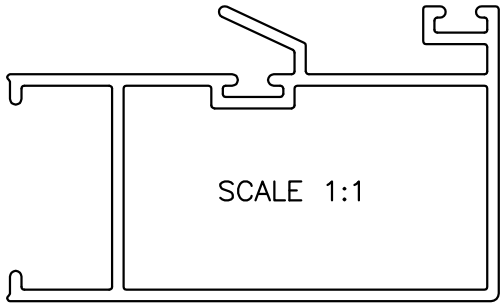

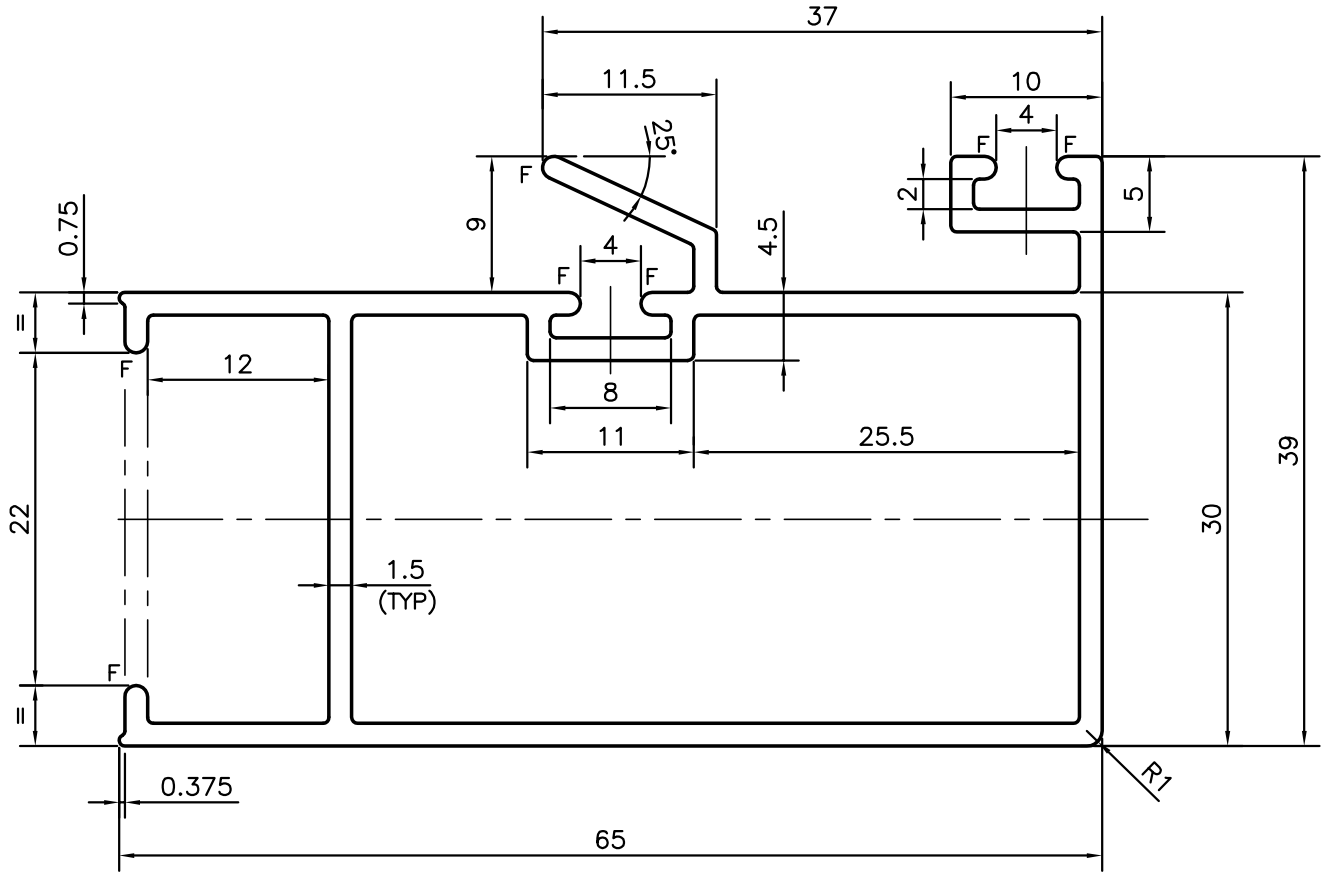

GENERAL WALL THICKNESS = 1.50mm
F = FULL RADIUS (7 PLACES)

			NAME	DATE
JINDAL SYMBOL OF QUALITY AN ISO 9001 COMPANY	JINDAL ALUMINIUM LTD. BANGALORE-560073 (INDIA)	DRAWN	RAGHAVENDRA	09-06-2001
		CHECKED		
		APPROVED		

1. ALL DIMENSIONS ARE IN mm.
2. ROUND OFF ALL SHARP CORNERS WITH 0.40 mm.
3. TOLERANCES WILL BE AS PER IS:6477-1983, UNLESS OTHERWISE SPECIFIED

SCALE	2:1
AREA mm^2	355.569
PERIMETER mm.	311.399
WEIGHT kg/m	0.964

PARTY'S NAME	GENERAL CATEGORY MUMBAI MARKET
PARTY'S DRAWING No.	AS OER DRAWING (EX-09 TH-INTERLOCK
ALLOY & TEMPER	HE9 WP
DESCRIPTION	TH-INTERLOCK

DRAWING No.	SECTION No.
P-3305-1	-
X180	X180
9414	9414
21009	21009