P–4347
12077
21051

F= RADII FULL (8 PLACES)

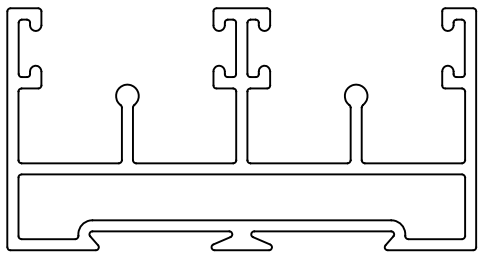

ACTUAL SIZE

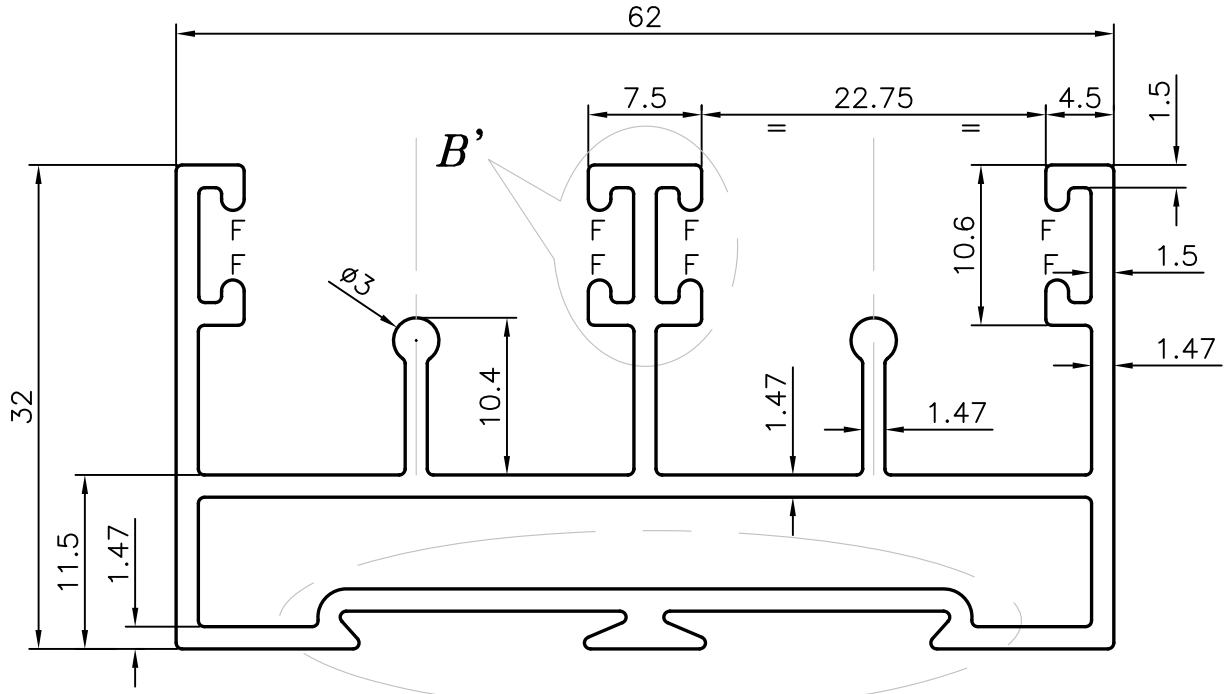

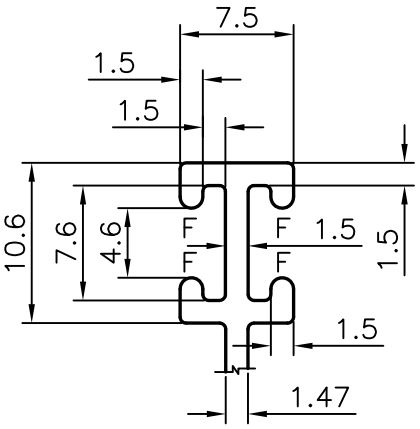

DETAIL–B

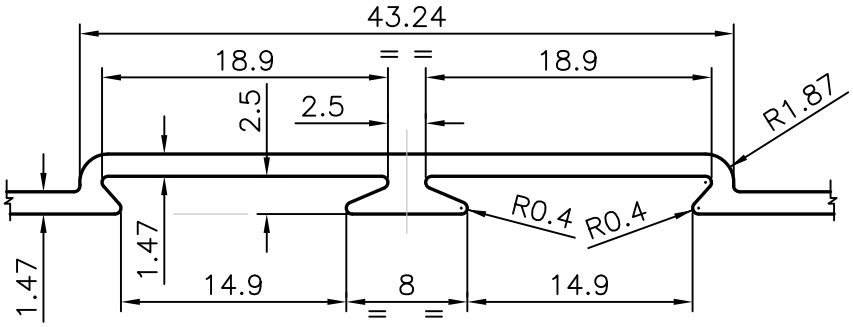

DETAIL–A

			NAME	DATE
JINDAL SYMBOL OF QUALITY AN ISO 9002 COMPANY	JINDAL ALUMINIUM LTD. BANGALORE–560073 (INDIA)	DRAWN	MALINGAPPA	29.07.2003
		CHECKED		
		APPROVED		

1. ALL DIMENSIONS ARE IN mm.
2. ROUND OFF ALL SHARP CORNERS WITH 0.40 mm.
3. TOLERANCES WILL BE AS PER IS: 6477–1983 UNLESS OTHERWISE SPECIFIED

SCALE	1:1/2:1
AREA mm^2	409.82
PERIMETER mm.	394.14
WEIGHT kg/m	1.106

PARTY'S NAME	GENERAL CATEGORY AHMEDABAD MARKET
PARTY'S DRAWING No.	AS PER SKETCH
ALLOY & TEMPER	HE9 WP
DESCRIPTION	WINDOW SECTION

DRAWING No.	SECTION No.
P–4347	–
12077	12077
21051	21051