P–4881
83108
21066

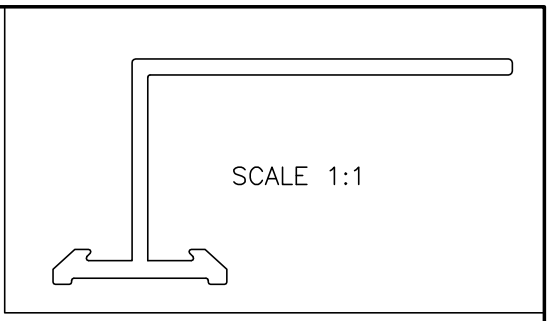

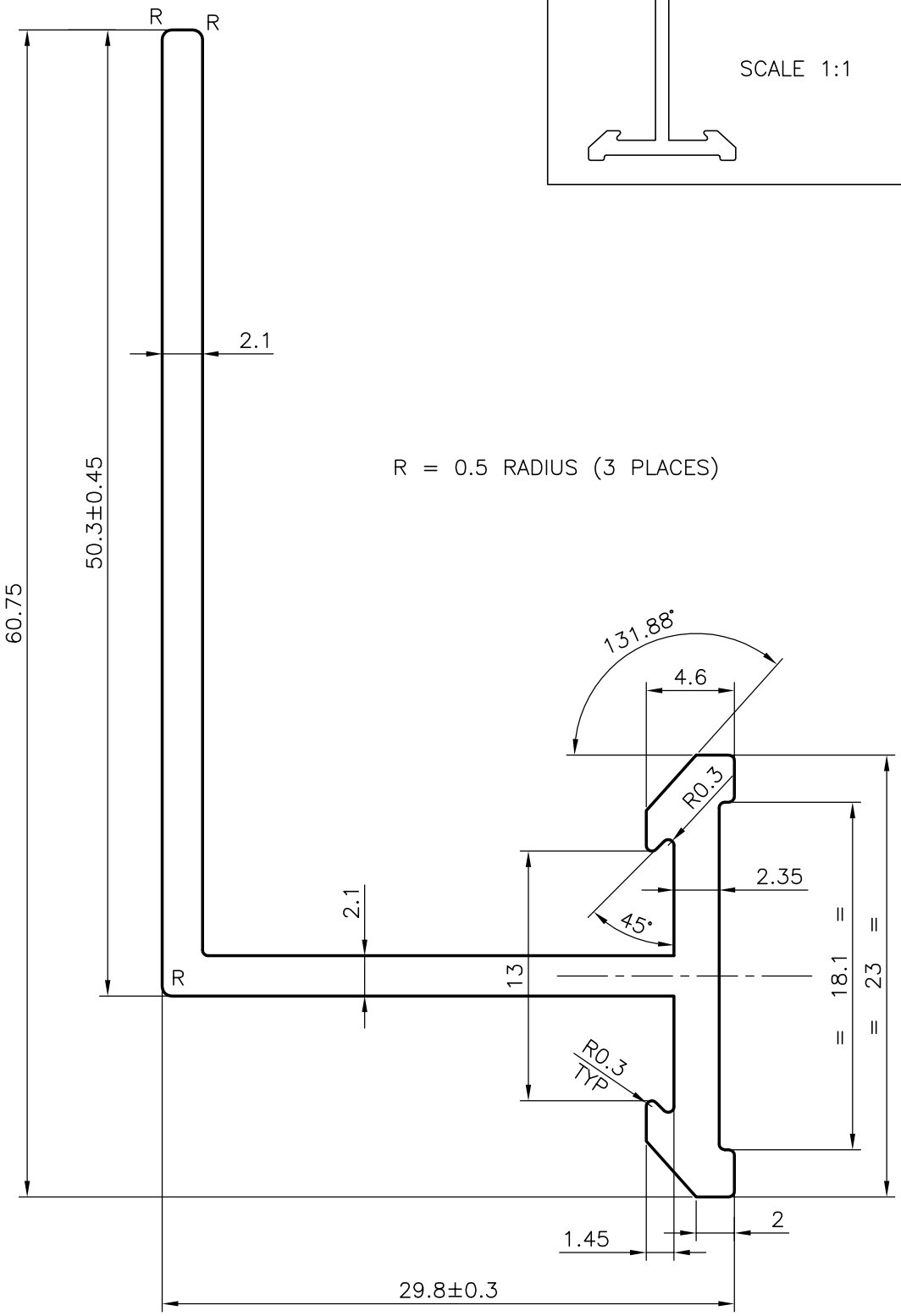

			NAME	DATE
JINDAL SYMBOL OF QUALITY AN ISO 9002 COMPANY	*JINDAL ALUMINIUM LTD.* *BANGALORE–560073 (INDIA)*	DRAWN	RAGHAVENDRA	29–05–2004
		CHECKED		
		APPROVED		

1. ALL DIMENSIONS ARE IN mm.
2. ROUND OFF ALL SHARP CORNERS WITH 0.40 mm.
3. TOLERANCES WILL BE AS PER BS:1474–1987 UNLESS OTHERWISE SPECIFIED

SCALE	3:1
AREA mm^2	221.063
PERIMETER mm.	205.779
WEIGHT kg/m	0.597

PARTY'S NAME	STAR GLASS ALUMINIUM C.C, SOUTH AFRICA
PARTY'S DRAWING No.	AF–2115
ALLOY & TEMPER	6063 T6
DESCRIPTION	FIXING LUG

DRAWING No.	SECTION No.
P–4881	–
83108	83108
21066	21066