P−4703	
21080	

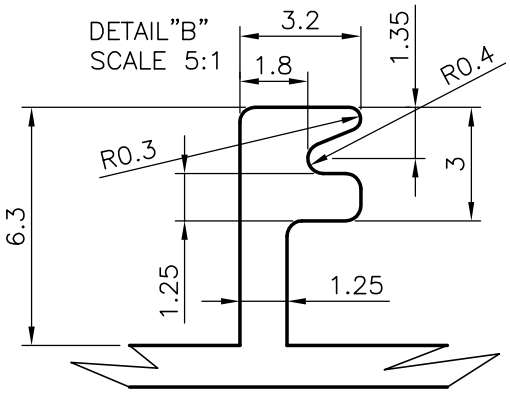

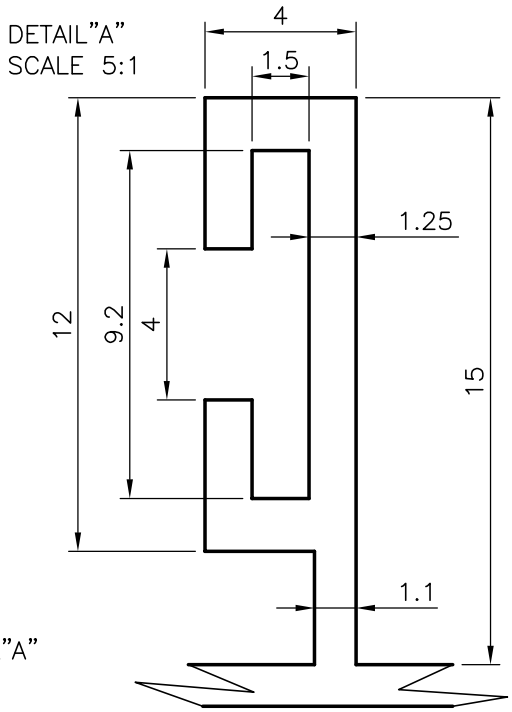

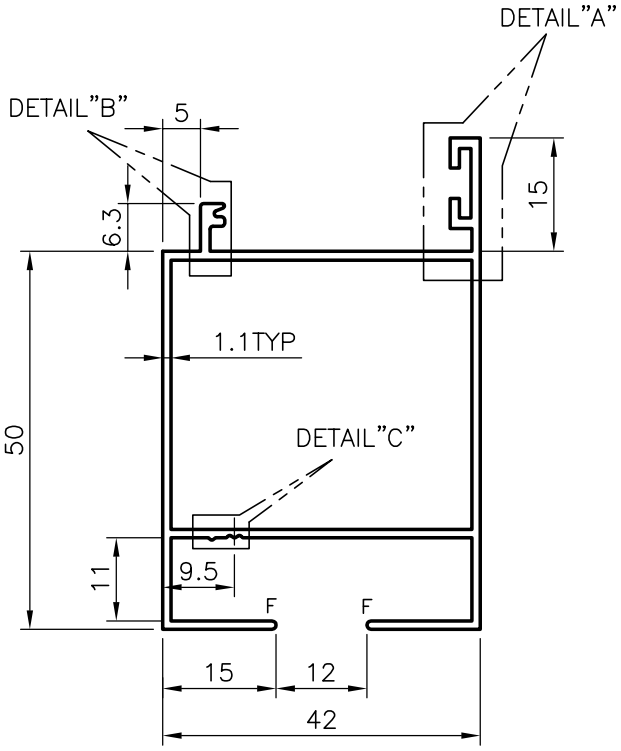

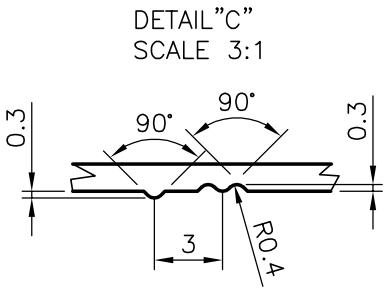

GENERAL WALL THICKNESS = 1.10mm

F = FULL RADIUS (2 PLACES)

JINDAL SYMBOL OF QUALITY AN ISO 9002 COMPANY	*JINDAL ALUMINIUM LTD.* *BANGALORE−560073 (INDIA)*		NAME	DATE
		DRAWN	RAGHAVENDRA	16−11−2004
		CHECKED		
		APPROVED		
1. ALL DIMENSIONS ARE IN mm. 2. ROUND OFF ALL SHARP CORNERS WITH 0.40 mm. 3. TOLERANCES WILL BE AS PER BS:1474−1987 UNLESS OTHERWISE SPECIFIED		SCALE		1:1
		AREA mm^2		276.506
		PERIMETER mm.		332.9
PARTY'S NAME	SYDNEY ALUMINIUM & GLASS− DOHA	WEIGHT kg/m		0.747
		DRAWING No.		SECTION No.
PARTY'S DRAWING No.	AS PER SAMPLE	P−4703		−
		21080		21080
ALLOY & TEMPER	6063 T6			
DESCRIPTION	WINDOW SECTION			