P-5517	
21094	

1. GENERAL WALL THICKNESS:- 2.0 mm.
2. F = FULL RADIUS (1)

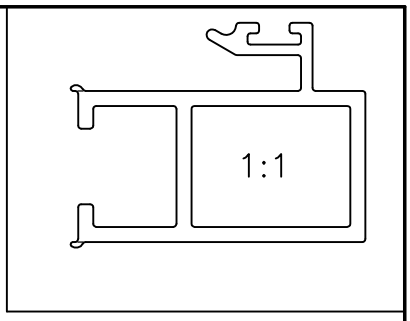

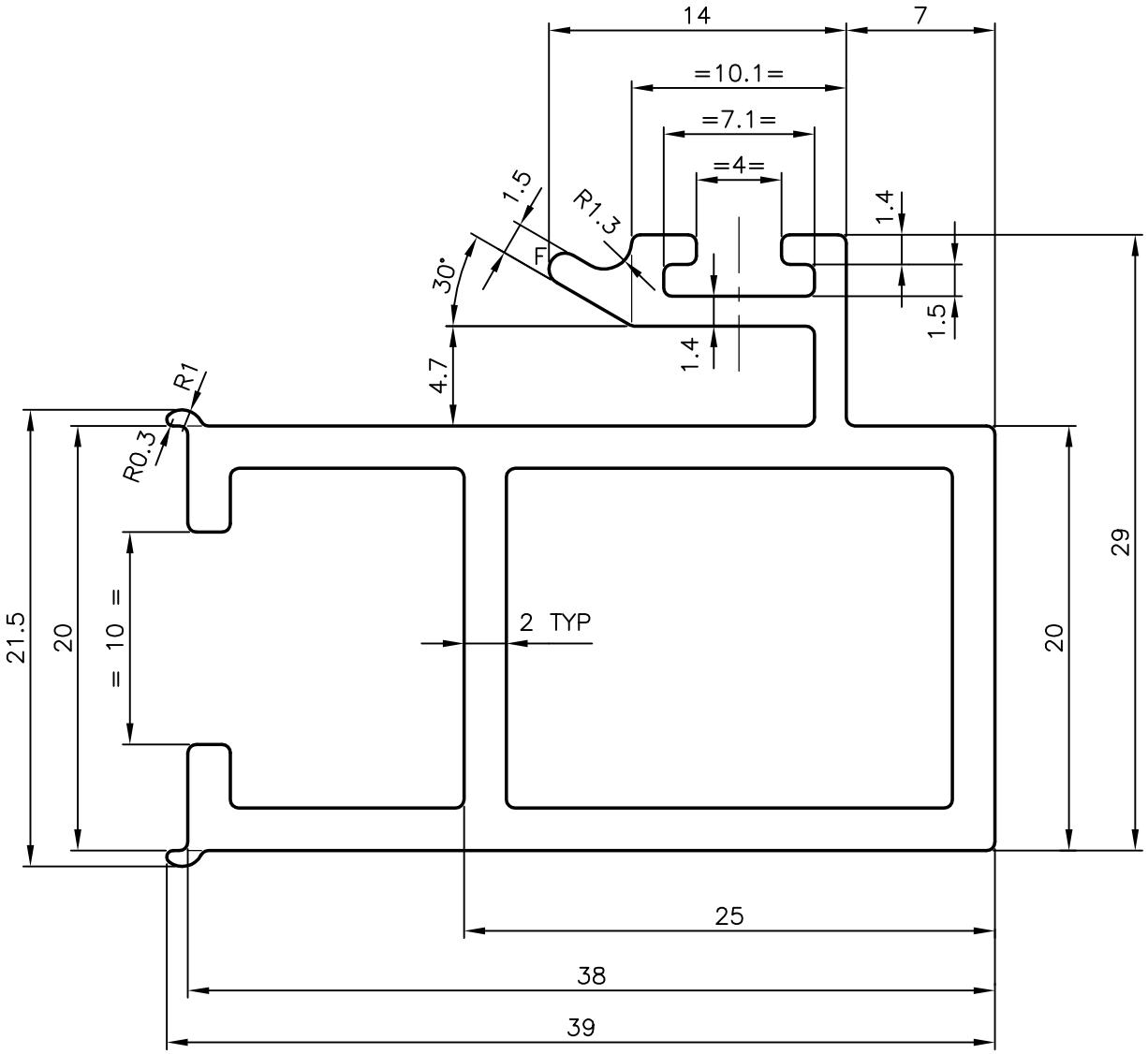

			NAME	DATE
JINDAL SYMBOL OF QUALITY AN ISO 9001 COMPANY	*JINDAL ALUMINIUM LTD.* *BANGALORE-560073 (INDIA)*	DRAWN	MALINGAPPA	24-05-2005
		CHECKED		
		APPROVED		

1. ALL DIMENSIONS ARE IN mm.
2. ROUND OFF ALL SHARP CORNERS WITH 0.40 mm.
3. TOLERANCES WILL BE AS PER IS:6477-1983 UNLESS OTHERWISE SPECIFIED

SCALE	3:1
AREA mm^2	271.91
PERIMETER mm.	208.342
WEIGHT kg/m	0.734

PARTY'S NAME	GENERAL CATEGORY, KOLKATA MARKET
PARTY'S DRAWING No.	HEAVIER OF SECTION NO. 21052
ALLOY & TEMPER	HE9 WP
DESCRIPTION	INTER LOCK SECTION

DRAWING No.	SECTION No.
P-5517	-
21094	21094