P-5520	
21096	

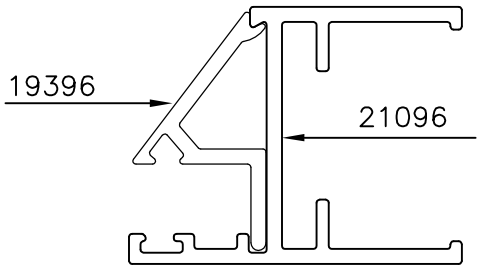

SECALE:- 1:1

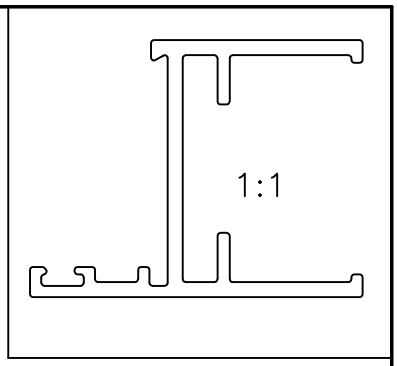

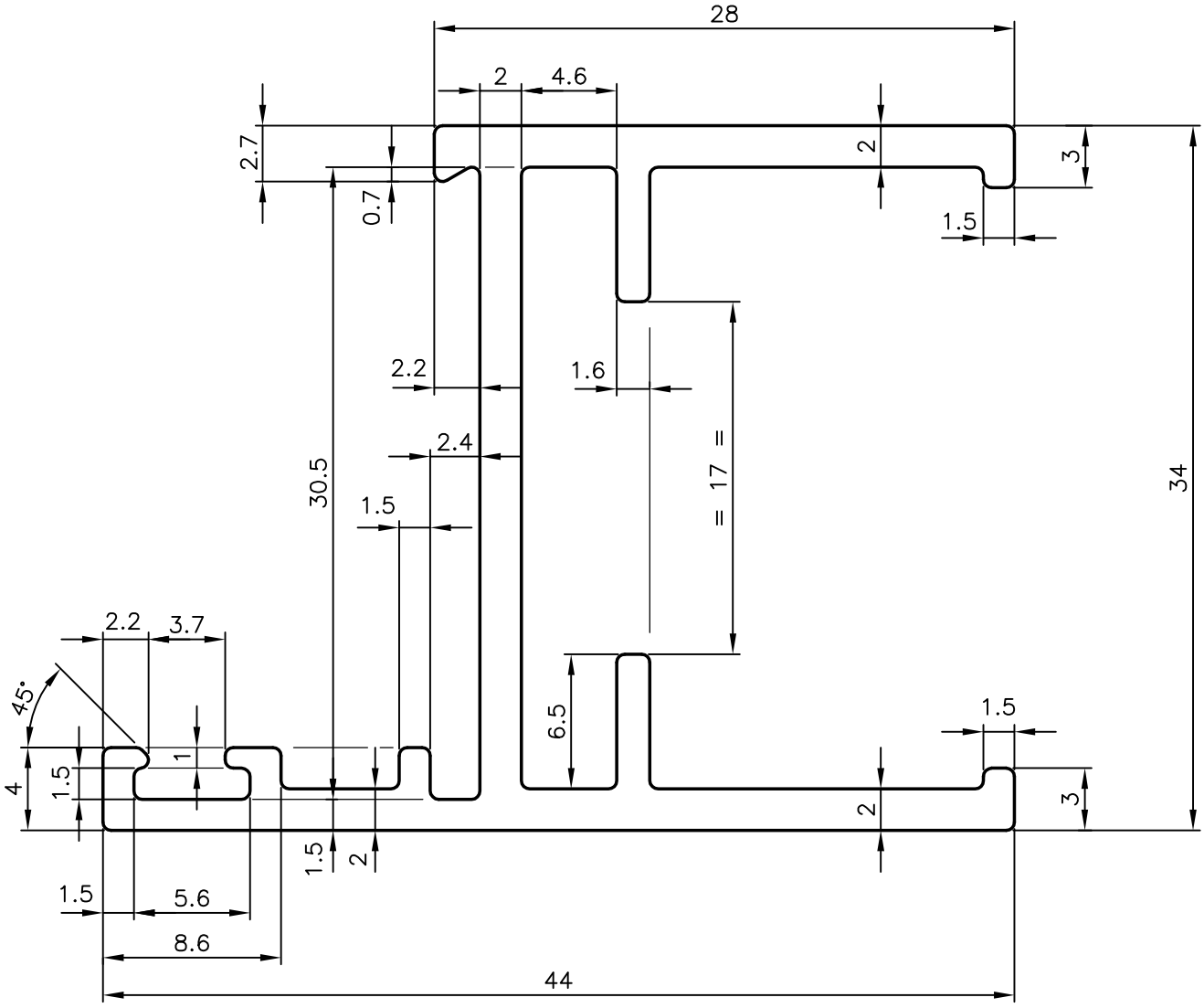

GENERAL WALL THICKNESS:- 2.0 mm.

			NAME	DATE
JINDAL SYMBOL OF QUALITY AN ISO 9001 COMPANY	*JINDAL ALUMINIUM LTD.* *BANGALORE-560073 (INDIA)*	DRAWN	MALINGAPPA	26-05-2005
		CHECKED		
		APPROVED		

1. ALL DIMENSIONS ARE IN mm.
2. ROUND OFF ALL SHARP CORNERS WITH 0.40 mm.
3. TOLERANCES WILL BE AS PER IS:3965-1981 UNLESS OTHERWISE SPECIFIED

SCALE	3:1
AREA mm^2	235.264
PERIMETER mm.	250.046
WEIGHT kg/m	0.635

		DRAWING No.	SECTION No.
PARTY'S NAME	GENERAL CATEGORY, KOLKATA MARKET		
PARTY'S DRAWING No.	HEAVIER OF SECTION NO. 20913	P-5520	-
ALLOY & TEMPER	HE9 WP	21096	21096
DESCRIPTION	WINDOW SECTION		