P–6229–1
21125

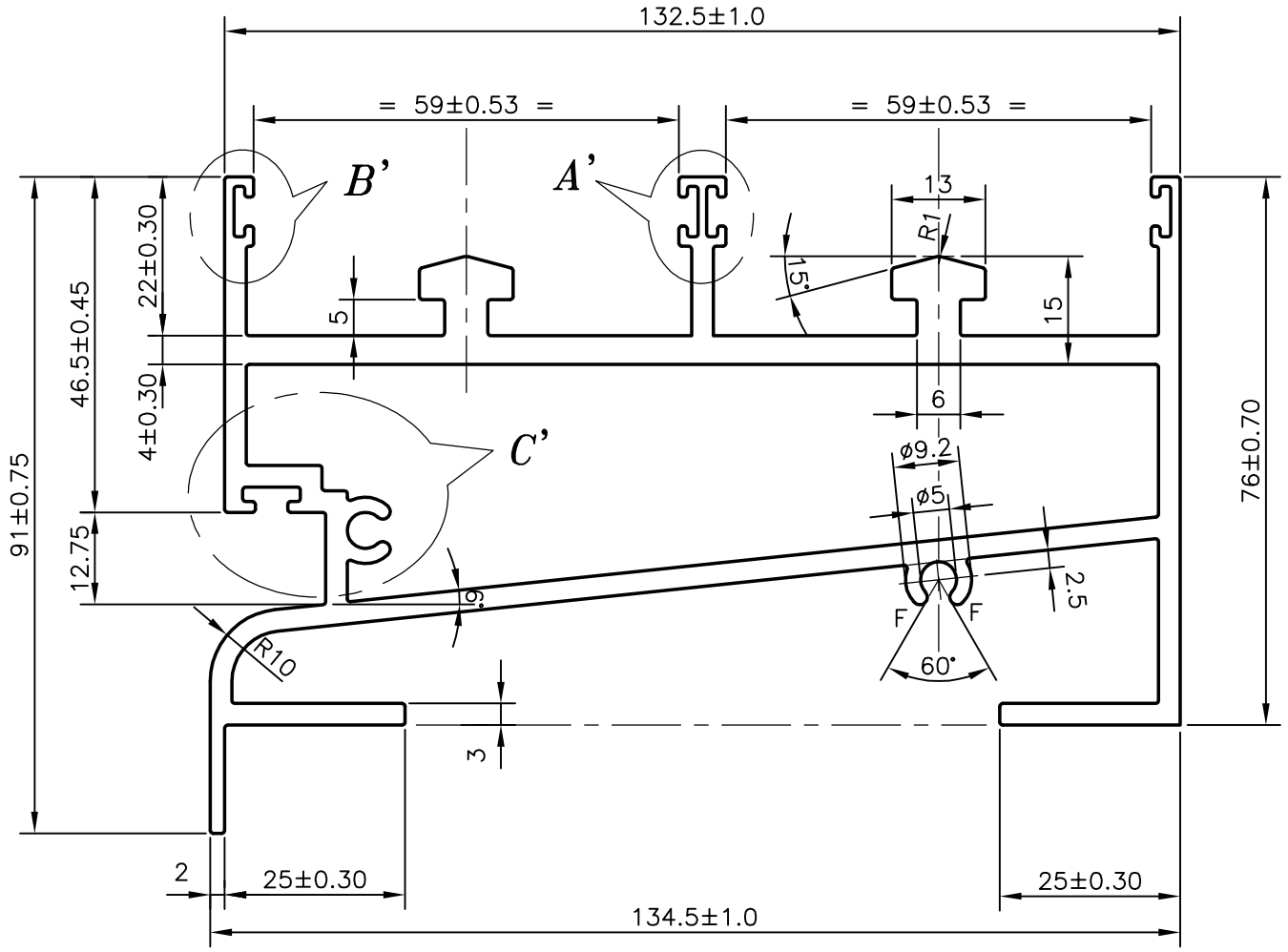

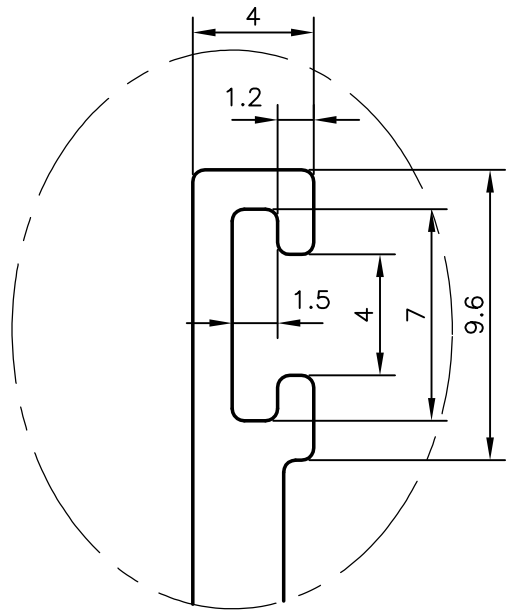

DETAIL–A
SCALE:–4:1

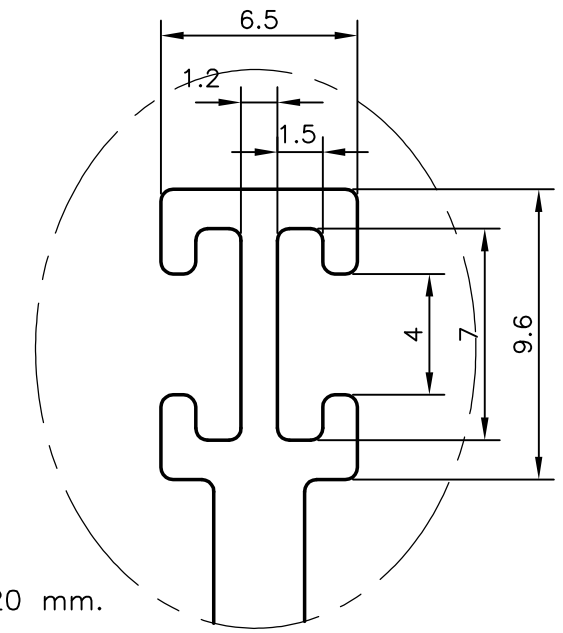

DETAIL–B
SCALE:–4:1

1. ALL THE SURFACE TO BE TREATED AS EXPOSED SURFACES
2. F = FULL RADIUS (4 PLACES)
3. GENERAL WALL THICKNESS:– 3 ±0.30 mm.
4. UNSPECIFIED DIMENSIONAL TOLERANCES WILL BE:– 0.20 mm.

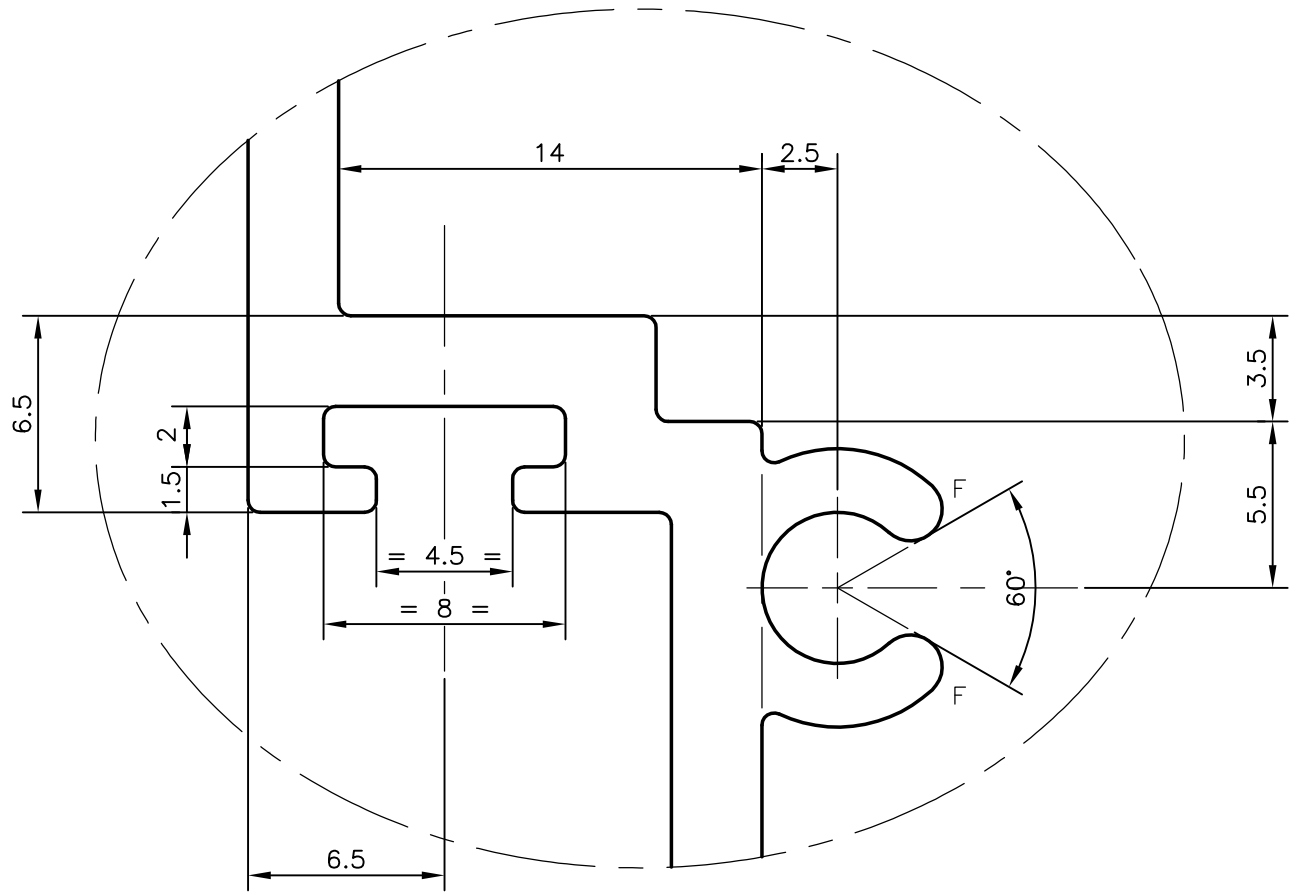

DETAIL–C
SCALE:–4:1

SYMBOL OF QUALITY
AN ISO 9001 COMPANY

JINDAL ALUMINIUM LTD.
BANGALORE–560073 (INDIA)

1. ALL DIMENSIONS ARE IN mm.
2. ROUND OFF ALL SHARP CORNERS WITH 0.40 mm.
3. TOLERANCES WILL BE AS PER IS:6477–1983 UNLESS OTHERWISE SPECIFIED

PARTY'S NAME	GENERAL CATEGORY, MUMBAI MARKET
PARTY'S DRAWING No.	AX–2402–28
ALLOY & TEMPER	6063 T5
DESCRIPTION	2 TRACK FOR BOTTOM

	NAME	DATE
DRAWN	MALINGAPPA	14–03–2006
CHECKED		
APPROVED		

SCALE	1:1
AREA mm^2	1865.926
PERIMETER mm.	834.429
WEIGHT kg/m	5.038

DRAWING No.	SECTION No.
P–6229–1	–
21125	21125