P–6409
21140

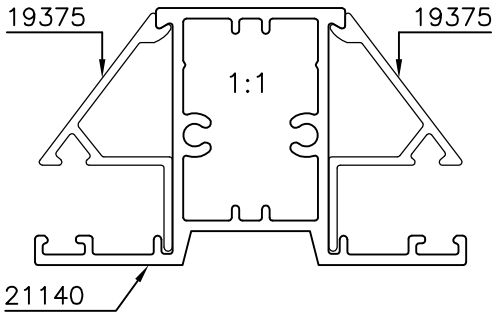

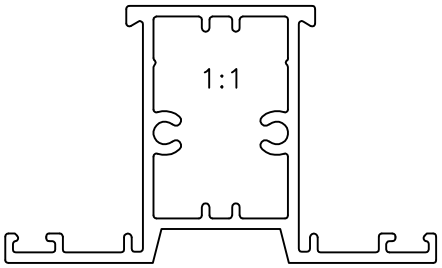

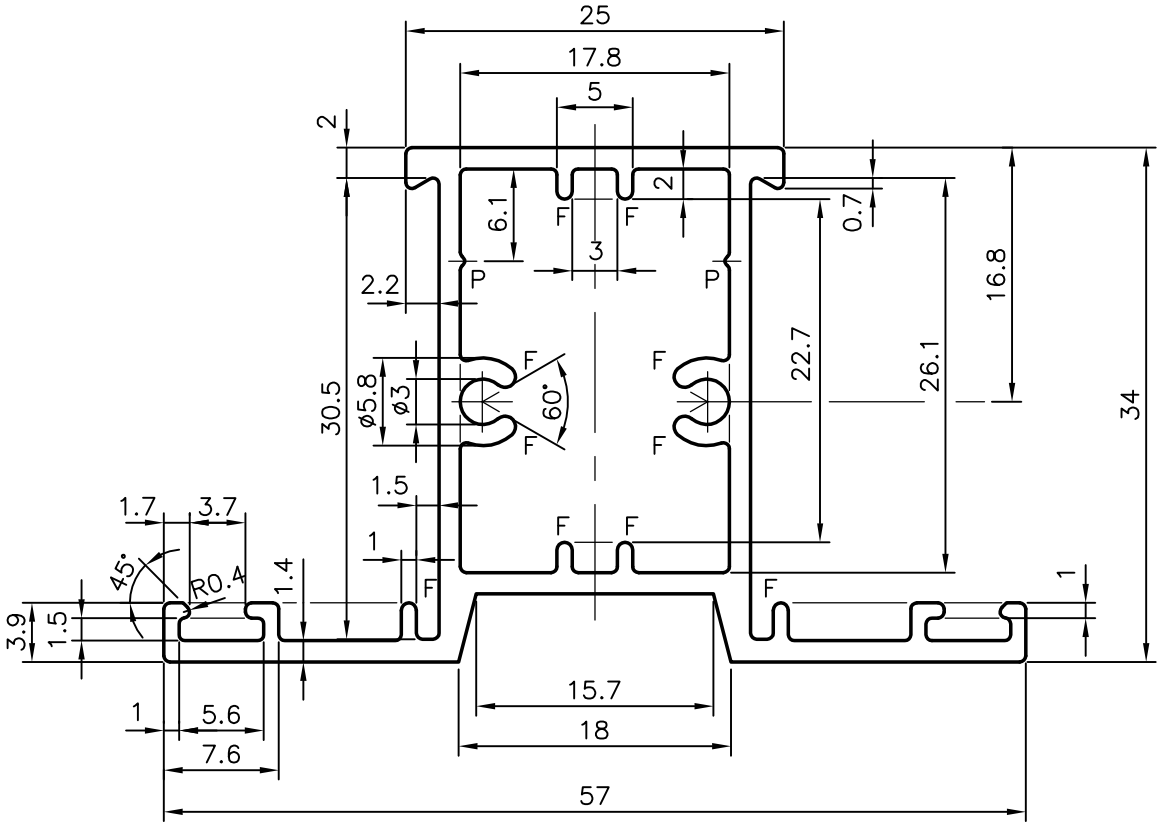

1. GENERAL WALL THICKNESS = 1.4 mm
2. F = FULL RADIUS (10 PLACES)
3. P = PIP 0.3x90°xR0.3 (2 PLACES)

JINDAL SYMBOL OF QUALITY AN ISO 9001 COMPANY	*JINDAL ALUMINIUM LTD.* *BANGALORE–560073 (INDIA)*		NAME	DATE
		DRAWN	MALINGAPPA	18–05–2006
		CHECKED		
		APPROVED		
1. ALL DIMENSIONS ARE IN mm. 2. ROUND OFF ALL SHARP CORNERS WITH 0.40 mm. 3. TOLERANCES WILL BE AS PER IS:6477–1983 UNLESS OTHERWISE SPECIFIED		SCALE		2:1
		AREA mm^2		259.535
		PERIMETER mm.		229.524
		WEIGHT kg/m		0.701
PARTY'S NAME	GENERAL CATEGORY, COCHIN MARKET	DRAWING No.		SECTION No.
PARTY'S DRAWING No.	LIGHTER OF SECTION NO. 20915	P–6409		–
ALLOY & TEMPER	HE9 WP	21140		21140
DESCRIPTION	WINDOW SECTION			