P–6489
21144

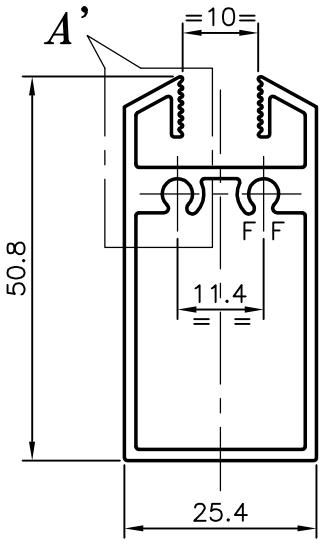

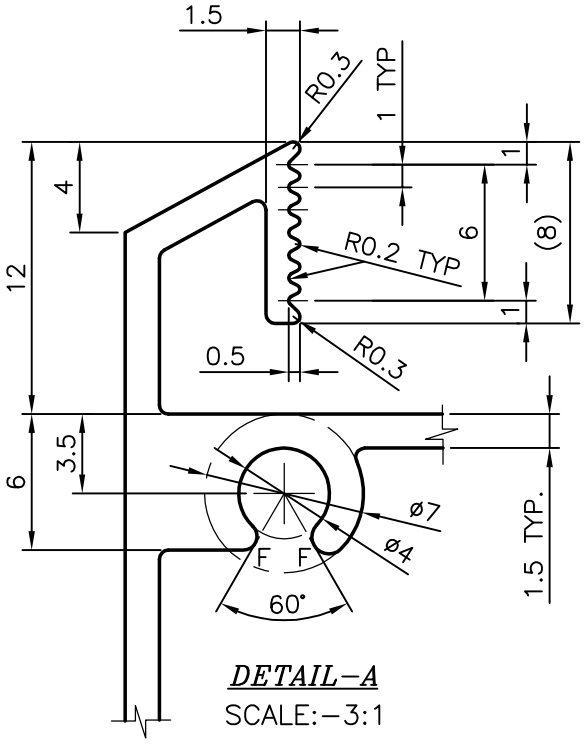

DETAIL–A
SCALE:–3:1

UNSPECIFIED WALL THICKNESS = 1.5 mm
F = FULL RADIUS (4 PLACES)

JINDAL SYMBOL OF QUALITY AN ISO 9001 COMPANY	***JINDAL ALUMINIUM LTD.*** ***BANGALORE–560073 (INDIA)***		NAME	DATE
		DRAWN	malingappa	13–06–2006
		CHECKED		
		APPROVED		
1. ALL DIMENSIONS ARE IN mm. 2. ROUND OFF ALL SHARP CORNERS WITH 0.40 mm. 3. TOLERANCES WILL BE AS PER IS:6477–1983 UNLESS OTHERWISE SPECIFIED		SCALE		1:1
		AREA mm^2		295.273
		PERIMETER mm.		218.336
PARTY'S NAME	GENERAL CATEGORY, COCHIN MARKET	WEIGHT kg/m		0.797
		DRAWING No.		SECTION No.
PARTY'S DRAWING No.	LIGHTER OF SEC. NO. 20715	P–6489		–
		21144		21144
ALLOY & TEMPER	HE9 WP			
DESCRIPTION	WINDOW SECTION			