P–6490
21145

UNSPECIFIED WALL THICKNESS = 1.5 mm
F = FULL RADIUS (5 PLACES)

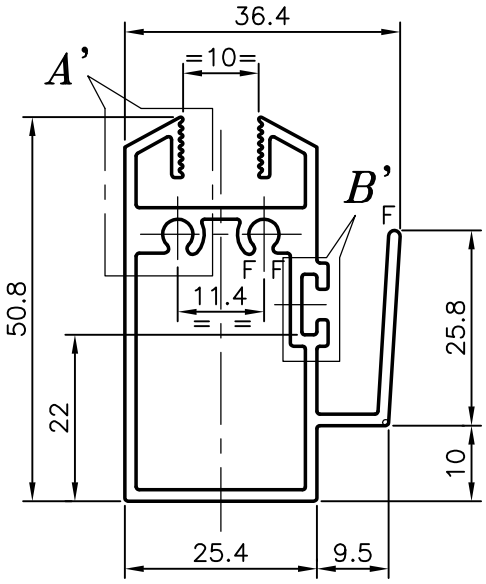

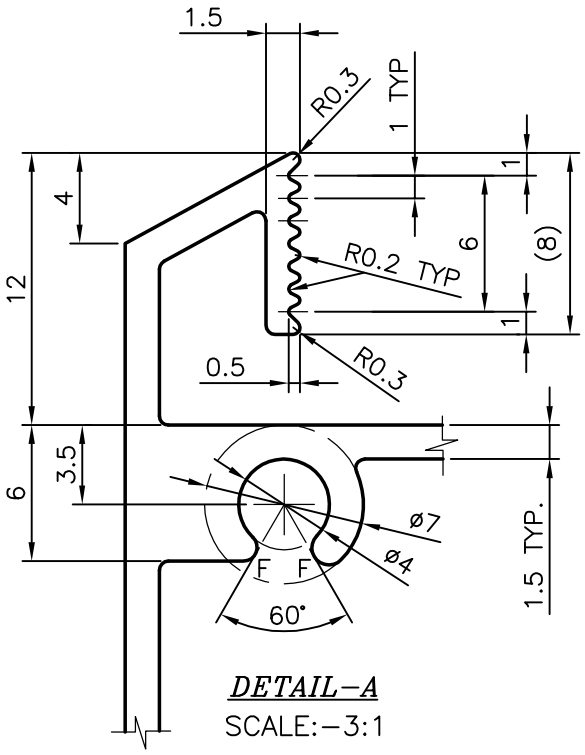

DETAIL–A
SCALE:–3:1

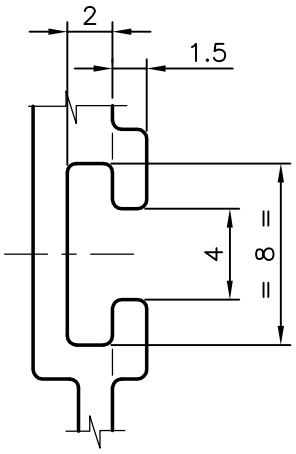

DETAIL–B
SCALE:–3:1

			NAME	DATE
JINDAL SYMBOL OF QUALITY AN ISO 9001 COMPANY	*JINDAL ALUMINIUM LTD.* *BANGALORE–560073 (INDIA)*	DRAWN	malingappa	13–06–2006
		CHECKED		
		APPROVED		
1. ALL DIMENSIONS ARE IN mm. 2. ROUND OFF ALL SHARP CORNERS WITH 0.40 mm. 3. TOLERANCES WILL BE AS PER IS:6477–1983 UNLESS OTHERWISE SPECIFIED		SCALE		1:1
		AREA mm²		364.999
		PERIMETER mm.		300.723
PARTY'S NAME	GENERAL CATEGORY, COCHIN MARKET	WEIGHT kg/m		0.985
		DRAWING No.		SECTION No.
PARTY'S DRAWING No.	LIGHTER OF SEC. NO. 20711	P–6490		–
		21145		21145
ALLOY & TEMPER	HE9 WP			
DESCRIPTION	WINDOW SECTION			