P–6543
21149

UNSPECIFIED WALL THICKNESS = 1.5 mm
F = FULL RADIUS (6 PLACES)

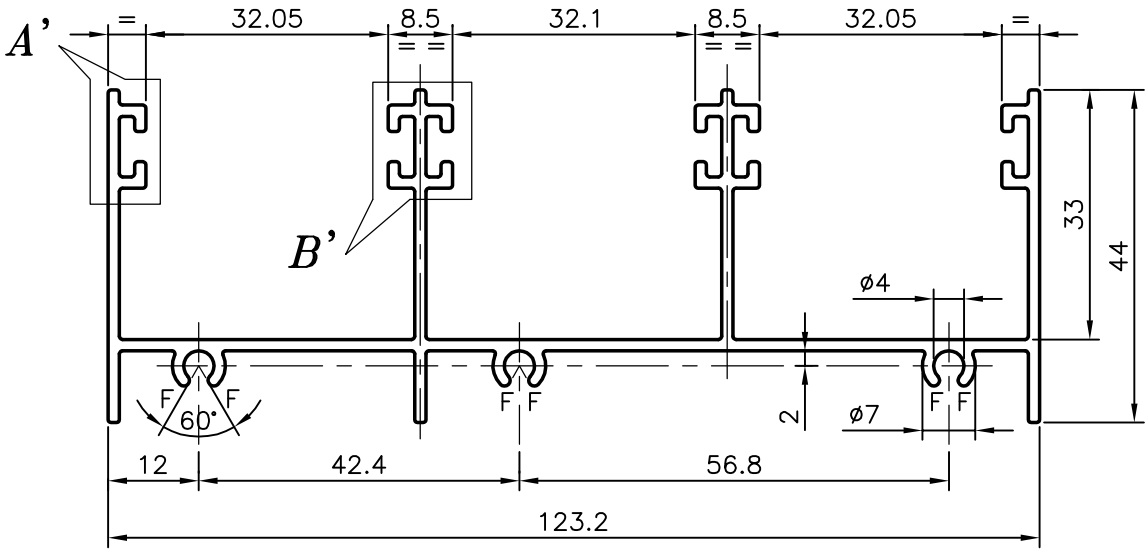

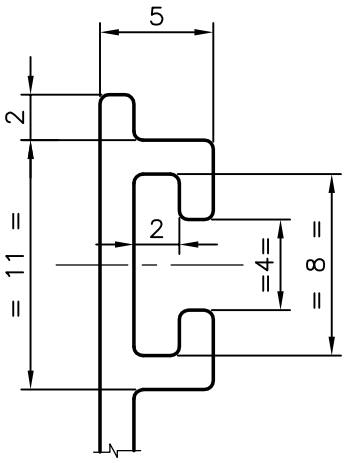

DETAIL–A
SCALE:–3:1

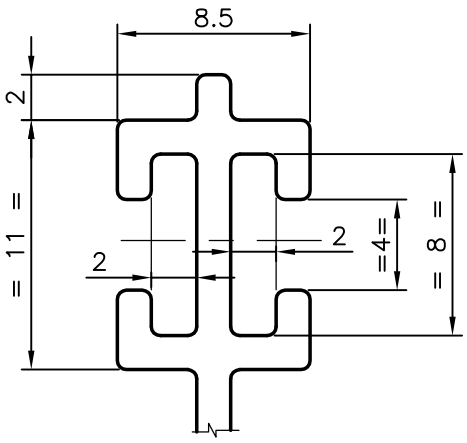

DETAIL–B
SCALE:–3:1

SYMBOL OF QUALITY
AN ISO 9001 COMPANY

JINDAL ALUMINIUM LTD.

BANGALORE–560073 (INDIA)

	NAME	DATE
DRAWN	malingappa	01–07–2006
CHECKED		
APPROVED		

1. ALL DIMENSIONS ARE IN mm.
2. ROUND OFF ALL SHARP CORNERS WITH 0.40 mm.
3. TOLERANCES WILL BE AS PER IS:3965–1981 UNLESS OTHERWISE SPECIFIED

SCALE	1:1
AREA mm^2	570.133
PERIMETER mm.	736.669
WEIGHT kg/m	1.539

PARTY'S NAME	GENERAL CATEGORY, COCHIN MARKET
PARTY'S DRAWING No.	LIGHTER OF SEC. NO. 20714
ALLOY & TEMPER	HE9 WP
DESCRIPTION	WINDOW SECTION

DRAWING No.	SECTION No.
P–6543	–
21149	21149