P–5683–1
S1559
21166

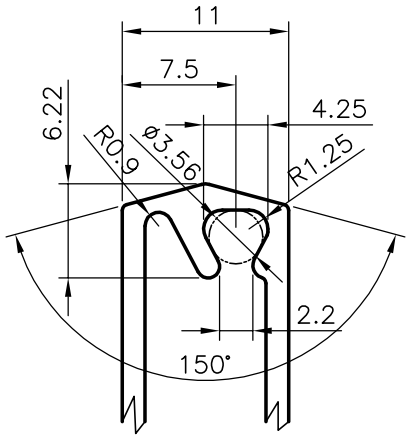

DETAIL "A"
SCALE 2:1

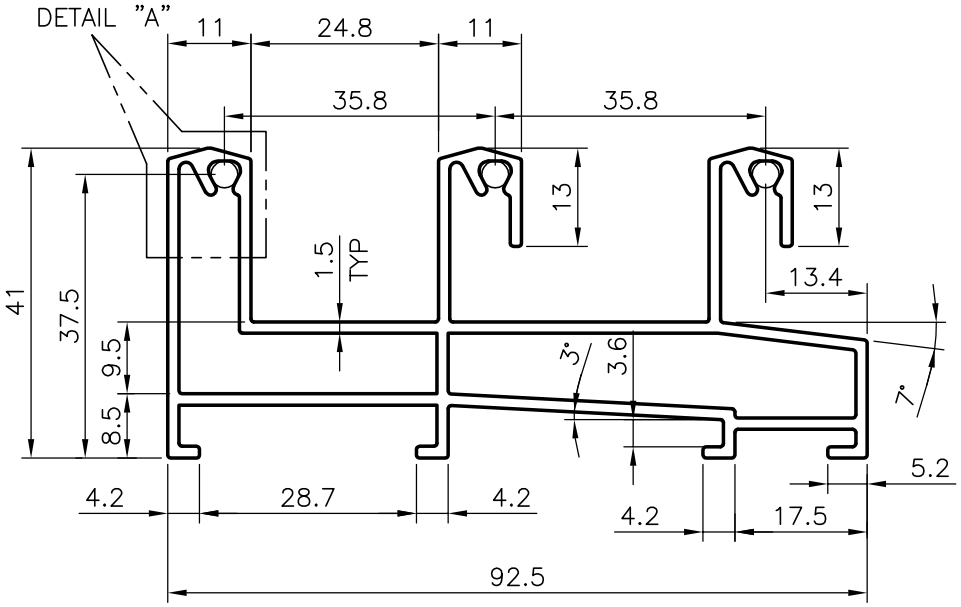

GENERAL WALL THICKNESS = 1.50mm

JINDAL SYMBOL OF QUALITY AN ISO 9001 COMPANY	*JINDAL ALUMINIUM LTD.* *BANGALORE–560073 (INDIA)*		NAME	DATE
		DRAWN	RAGHAVENDRA	17–07–2005
		CHECKED		
		APPROVED		
1. ALL DIMENSIONS ARE IN mm. 2. ROUND OFF ALL SHARP CORNERS WITH 0.40 mm. 3. TOLERANCES WILL BE AS PER IS:6477–1983 UNLESS OTHERWISE SPECIFIED		SCALE		1:1
		AREA mm^2		581.173
		PERIMETER mm.		498.156
PARTY'S NAME	B.L.KASHYAP & SONS LIMITED, BANGALORE	WEIGHT kg/m		1.569
		DRAWING No.		SECTION No.
PARTY'S DRAWING No.	AS PER SAMPLE & AS PER REQUIREMENT	P–5683–1		–
ALLOY & TEMPER	HE9 WP	S1559		S1559
		21166		21166
DESCRIPTION	WINDOW OUTER BOTTOM 3 TRACK			