P-6926-1	
21187	
–	

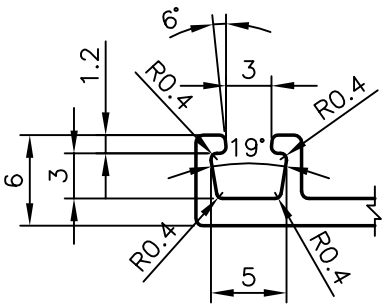

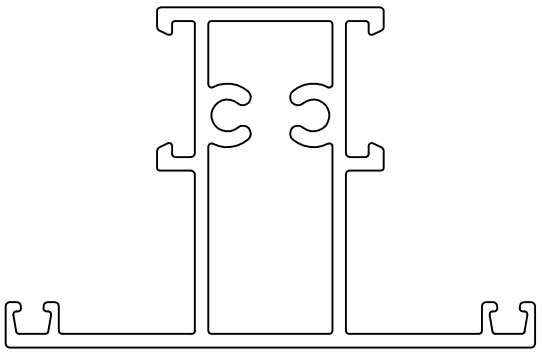

SCALE 1:1

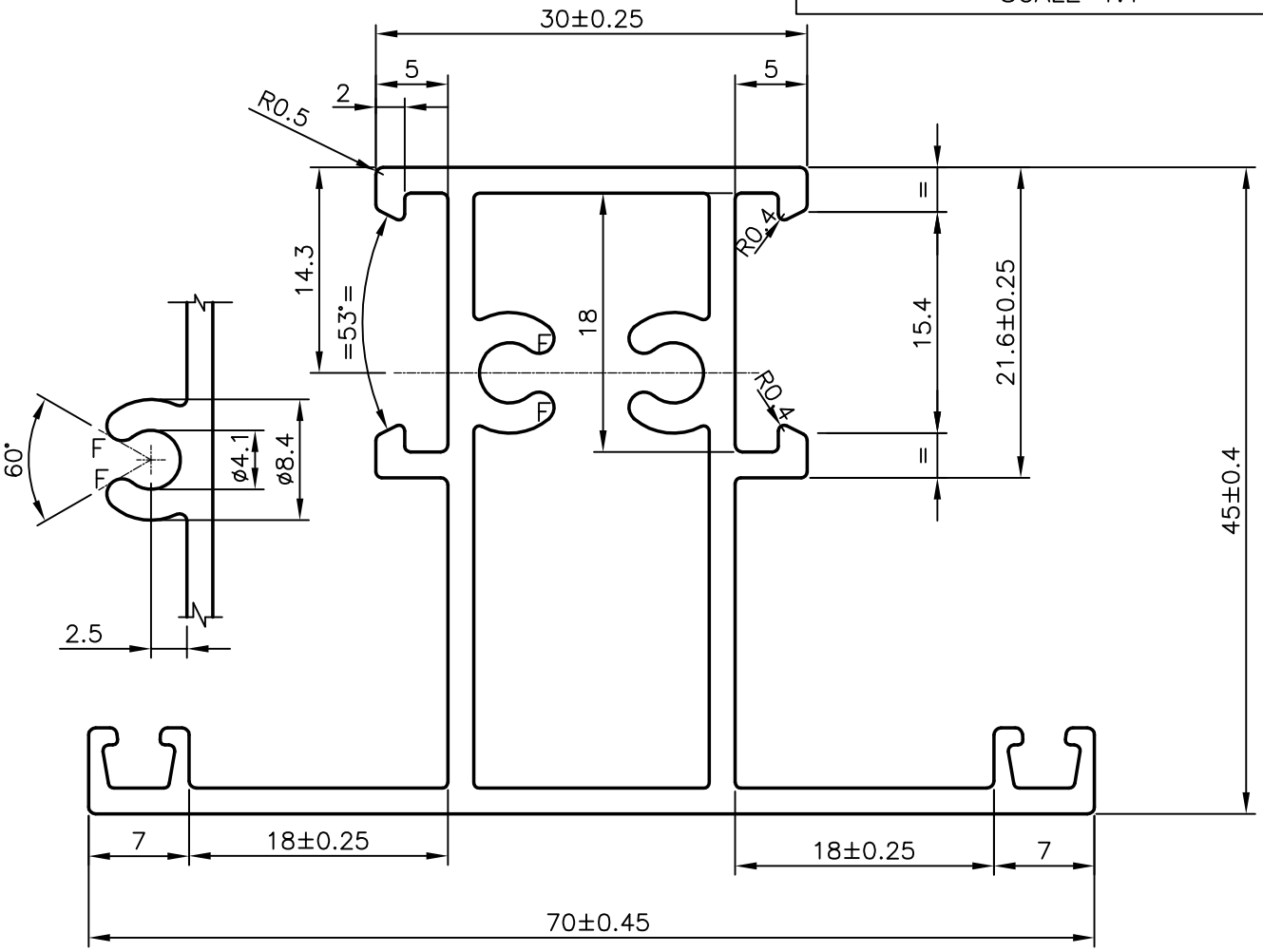

NOTE:–

1. GENERAL WALL THICKNESS IS 1.8±0.2 mm
2. F= FULL RADIUS (4 PLACE)
3. UNSPECIFIED RADII 0.5 mm

			NAME	DATE
SYMBOL OF QUALITY AN ISO 9001 COMPANY	*JINDAL ALUMINIUM LTD.* *BANGALORE-560073 (INDIA)*	DRAWN	PRASANNA.H.	12-01-2007
		CHECKED		
		APPROVED		

1. ALL DIMENSIONS ARE IN mm.
2. ROUND OFF ALL SHARP CORNERS WITH 0.40 mm.
3. TOLERANCES WILL BE AS PER DIN17615 PART-3 UNLESS OTHERWISE SPECIFIED

SCALE	2:1
AREA mm^2	447.579
PERIMETER mm.	312.661
WEIGHT kg/m	1.208

PARTY'S NAME	GENERAL CATEGORY, MUMBAI MARKET
PARTY'S DRAWING No.	OP/04
ALLOY & TEMPER	6063-T6
DESCRIPTION	T PROFILE

DRAWING No.	SECTION No.
P-6926-1	–
21187	21187
–	–