P-6927-1	
21188	
–	

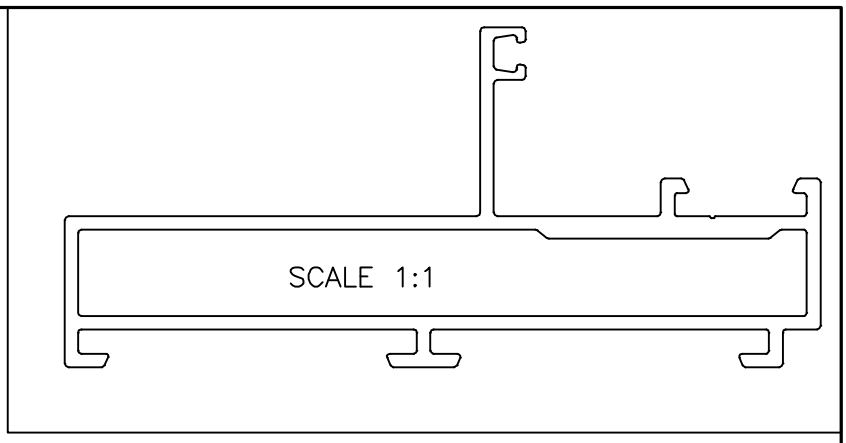

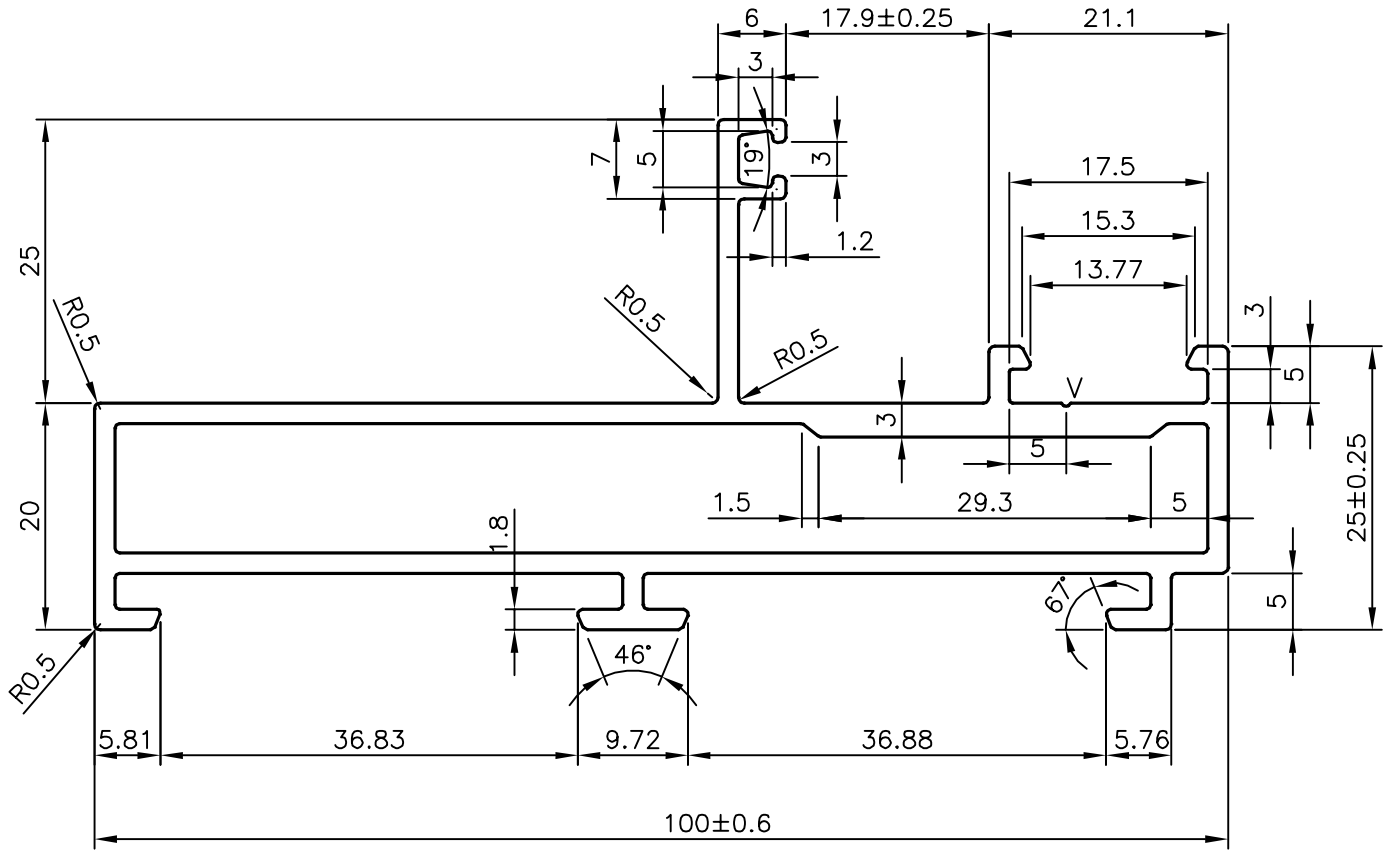

NOTE:–

1. GENERAL WALL THICKNESS IS 1.80±0.2 mm
2. V= 0.3x90° (1 PLACE)

			NAME	DATE
JINDAL SYMBOL OF QUALITY AN ISO 9001 COMPANY	*JINDAL ALUMINIUM LTD.* *BANGALORE–560073 (INDIA)*	DRAWN	PRASANNA.H.	12-01-2007
		CHECKED		
		APPROVED		

1. ALL DIMENSIONS ARE IN mm.
2. ROUND OFF ALL SHARP CORNERS WITH 0.40 mm.
3. TOLERANCES WILL BE AS PER DIN17615 PART-3 UNLESS OTHERWISE SPECIFIED

SCALE	1.5:1
AREA mm^2	573.984
PERIMETER mm.	378.574
WEIGHT kg/m	1.548

		DRAWING No.	SECTION No.
PARTY'S NAME	GENERAL CATEGORY, MUMBAI MARKET		
PARTY'S DRAWING No.	OP/05	P-6927-1	–
ALLOY & TEMPER	6063-T6	21188	21188
DESCRIPTION	OUTER FRAME (OPENABLE/FIXED)	–	–