P-5129-2
S1377
21201

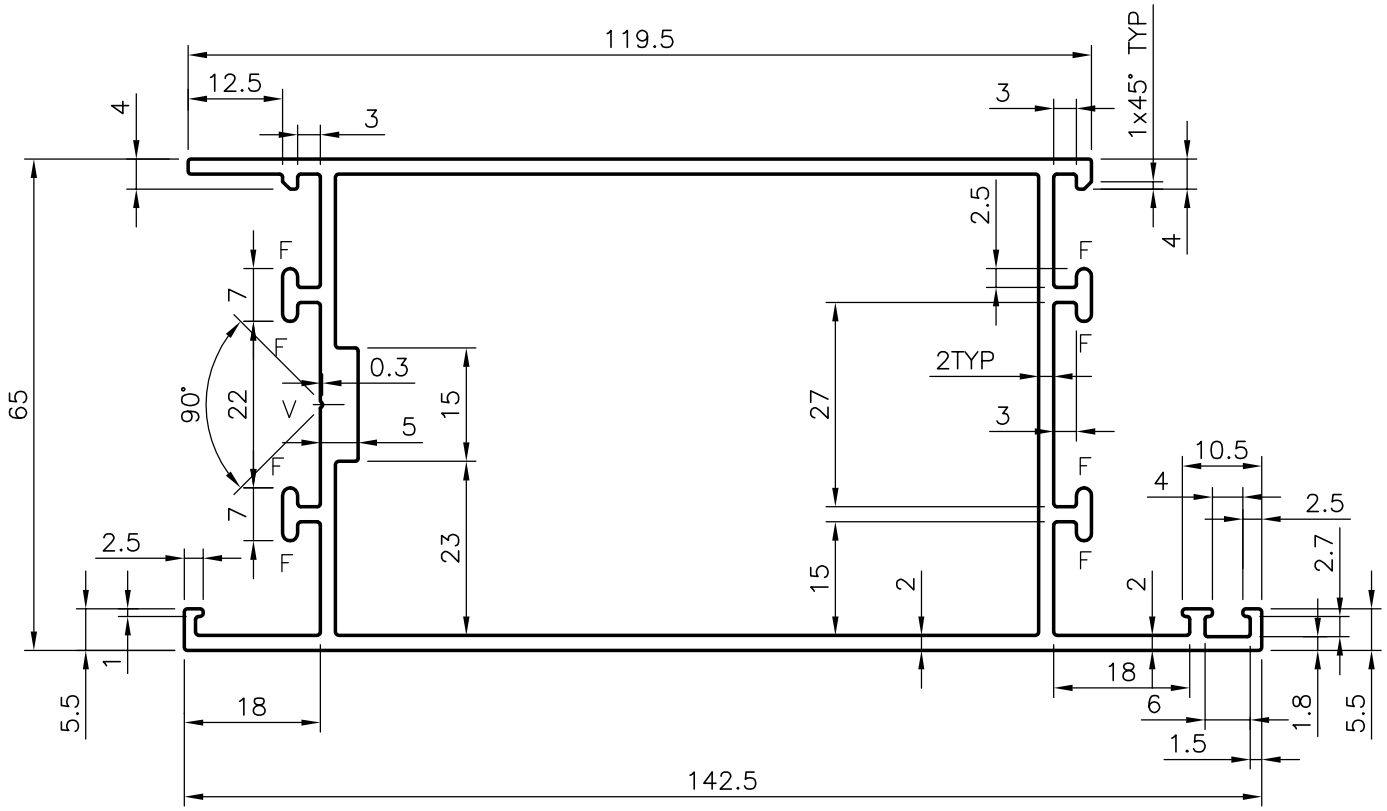

GENERAL WALL THICKNESS = 2.00mm
F = FULL RADIUS (8 PLACES)
V = 0.30x90° VEE GROOVE

			NAME	DATE
SYMBOL OF QUALITY AN ISO 9001 COMPANY	*JINDAL ALUMINIUM LTD.* *BANGALORE-560073 (INDIA)*	DRAWN	RAGHAVENDRA	03-12-2004
		CHECKED		
		APPROVED		

1. ALL DIMENSIONS ARE IN mm.
2. ROUND OFF ALL SHARP CORNERS WITH 0.40 mm.
3. TOLERANCES WILL BE AS PER IS:6477-1983 UNLESS OTHERWISE SPECIFIED

SCALE	1:1
AREA mm^2	917.302
PERIMETER mm.	561.335
WEIGHT kg/m	2.477

PARTY'S NAME	SIGNUM FIRE PROTECTION (INDIA) PVT. LTD, NAGPUR
PARTY'S DRAWING No.	AS PER SAMPLE & AS PER DRAWING
ALLOY & TEMPER	HE9 WP
DESCRIPTION	WINDOW SECTION

DRAWING No.	SECTION No.
P-5129-2	-
S1377	S1377
21201	21201