P–7563
21217

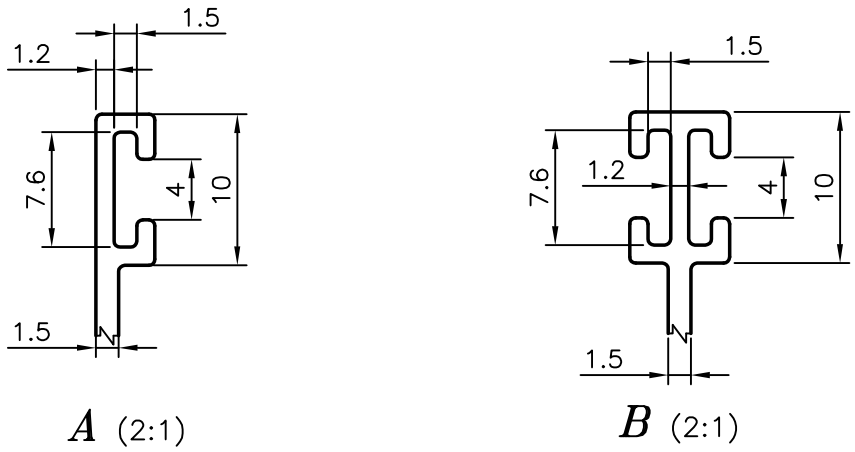

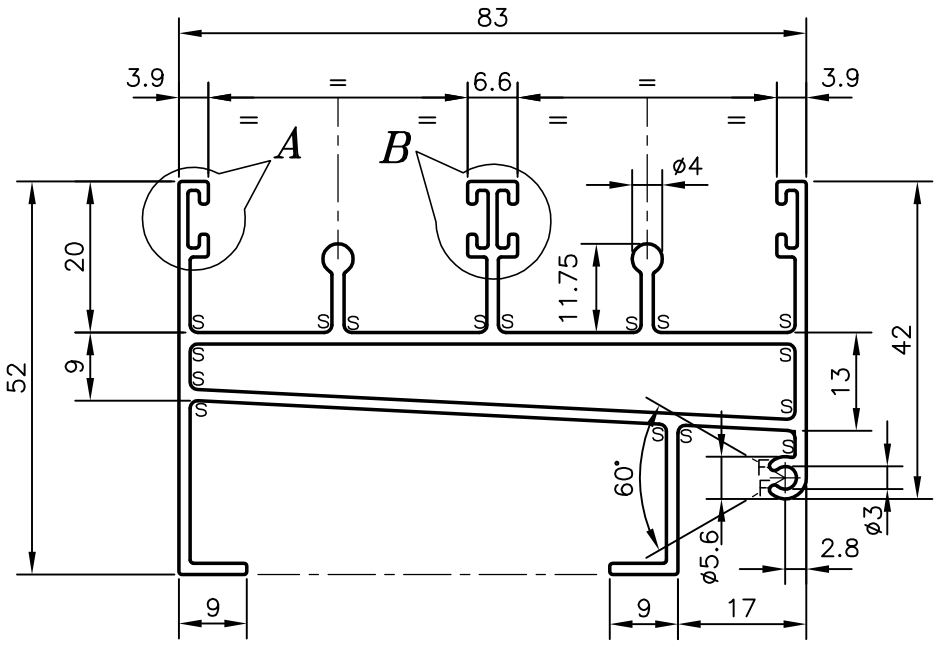

NOTE:–

1. F=FULL RADII (2–PLCS)
2. S=1.0 RADII (16–PLCS)
3. GENERAL WALL THICKNESS:– 1.50 mm., UNLESS OTHERWISE SPECIFIED

JINDAL SYMBOL OF QUALITY AN ISO 9001 COMPANY	*JINDAL ALUMINIUM LTD.* *BANGALORE–560073 (INDIA)*		NAME	DATE
		DRAWN	J.P.KAUSHIK	15–10–2007
		CHECKED		
		APPROVED		
1. ALL DIMENSIONS ARE IN mm. 2. ROUND OFF ALL SHARP CORNERS WITH 0.40 mm. 3. TOLERANCES WILL BE AS PER IS:6477–1983 UNLESS OTHERWISE SPECIFIED		SCALE		1:1
		AREA mm^2		556.218
		PERIMETER mm.		558.602
		WEIGHT kg/m		1.502
PARTY'S NAME	GENERAL CATEGORY, MUMBAI MARKET	DRAWING No.		SECTION No.
PARTY'S DRAWING No.	AS PER DRAWING	P–7563		–
ALLOY & TEMPER	HE9 WP	21217		21217
DESCRIPTION	WINDOW SECTION–SUBFRAME 05			