P–6075
S1673
21237

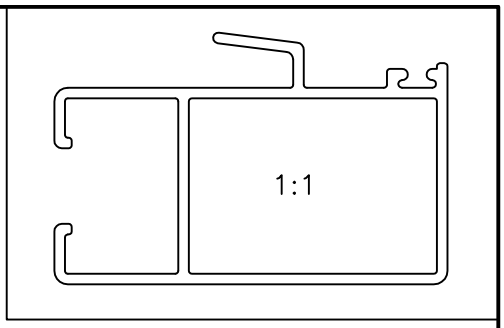

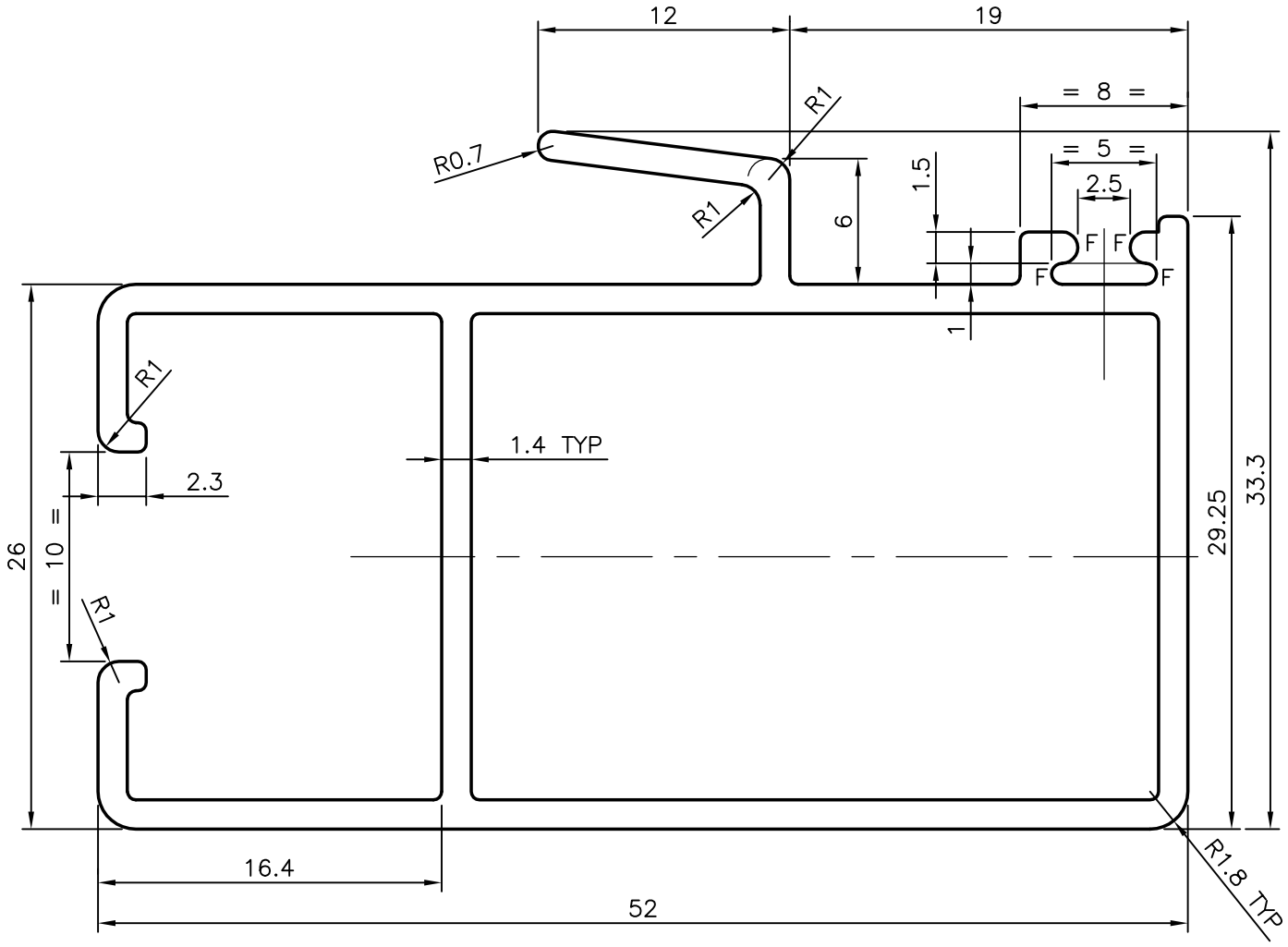

F = FULL RADIUS (4)

GENERAL WALL THICKNESS = 1.4 mm

JINDAL SYMBOL OF QUALITY AN ISO 9001 COMPANY	*JINDAL ALUMINIUM LTD.* *BANGALORE–560073 (INDIA)*		NAME	DATE
		DRAWN	MALINGAPPA	30–12–2005
		CHECKED		
		APPROVED		
1. ALL DIMENSIONS ARE IN mm. 2. ROUND OFF ALL SHARP CORNERS WITH 0.40 mm. 3. TOLERANCES WILL BE AS PER IS:6477–1983 UNLESS OTHERWISE SPECIFIED		SCALE		3:1
		AREA mm^2		264.38
		PERIMETER mm.		259.29
		WEIGHT kg/m		0.714
PARTY'S NAME	MATHIAS ALUMINIUM SYSTEMS PVT. LTD., MANGALORE	DRAWING No.	SECTION No.	
PARTY'S DRAWING No.	MASPL/AXT/S.S./10	P–6075	–	
ALLOY & TEMPER	HE9 WP	S1673	S1673	
		21237	21237	
DESCRIPTION	SHUTTER VERTICAL INTER LOCK			