P–6165
X506
21240

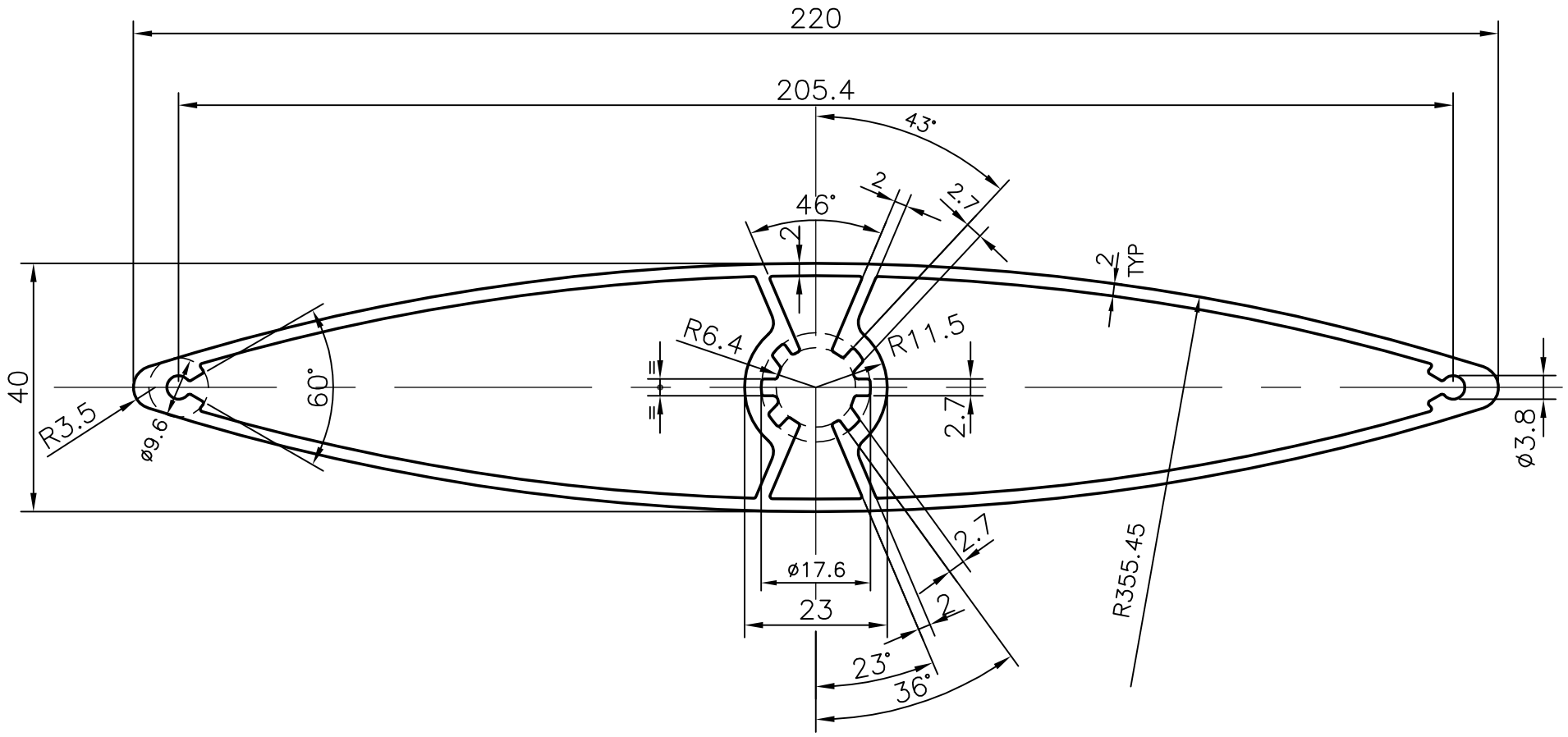

JINDAL SYMBOL OF QUALITY AN ISO 9001 COMPANY	*JINDAL ALUMINIUM LTD.* *BANGALORE–560073 (INDIA)*		NAME	DATE
		DRAWN	J.P.KAUSHIK	28–01–2006
		CHECKED		
		APPROVED		
1. ALL DIMENSIONS ARE IN mm. 2. ROUND OFF ALL SHARP CORNERS WITH 0.40 mm. 3. TOLERANCES WILL BE AS PER IS:6477–1983 UNLESS OTHERWISE SPECIFIED		SCALE		1:1
		AREA mm^2		1195.485
		PERIMETER mm.		454.776
PARTY'S NAME	EMAR ENTERPRISES, BANGALORE	WEIGHT kg/m		3.228
		DRAWING No.		SECTION No.
PARTY'S DRAWING No.	AS PER SAMPLE	P–6165		–
		X506		X506
ALLOY & TEMPER	HE9 WP	21240		21240
DESCRIPTION	LOUVER SECTION			