P-8879-1
21274

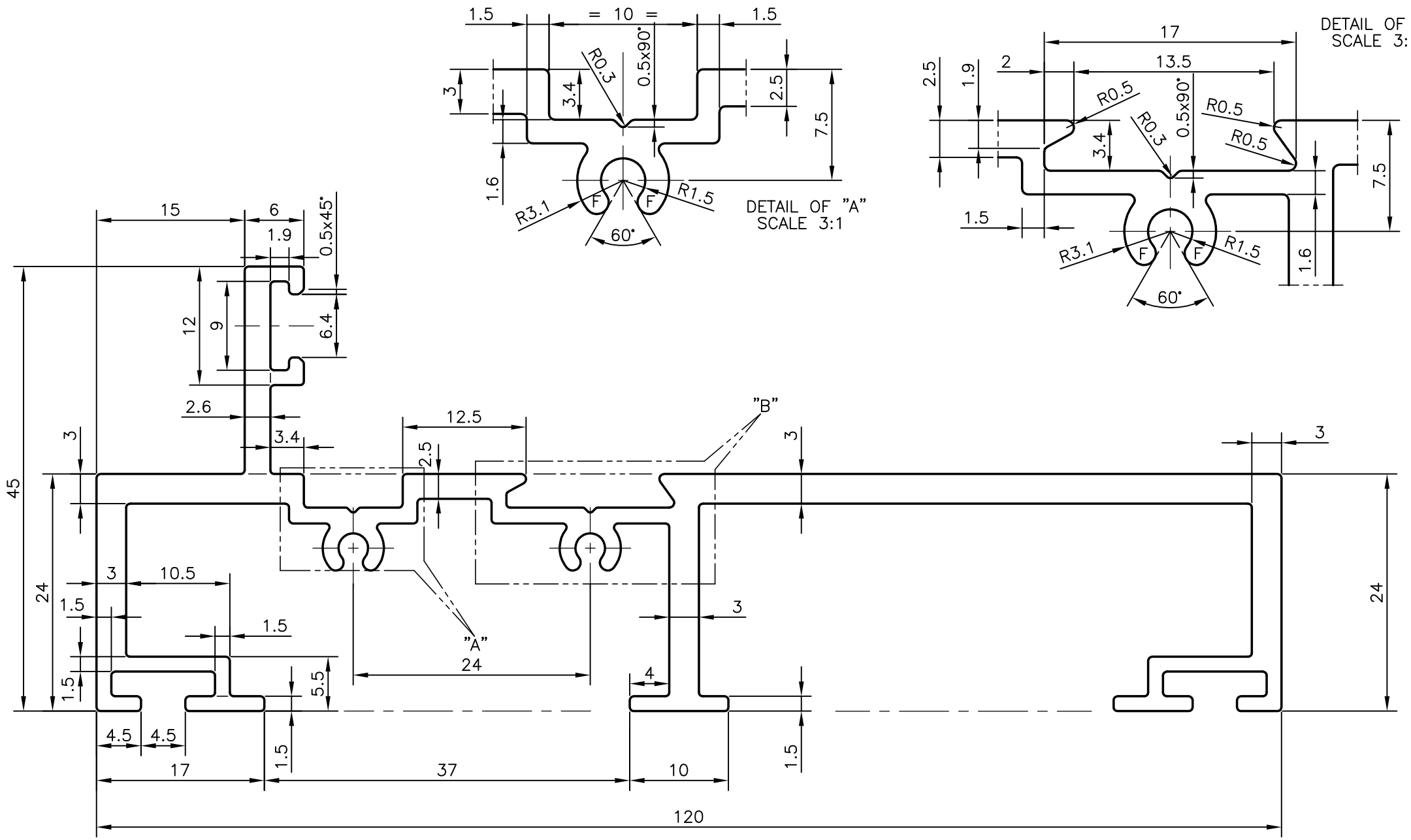

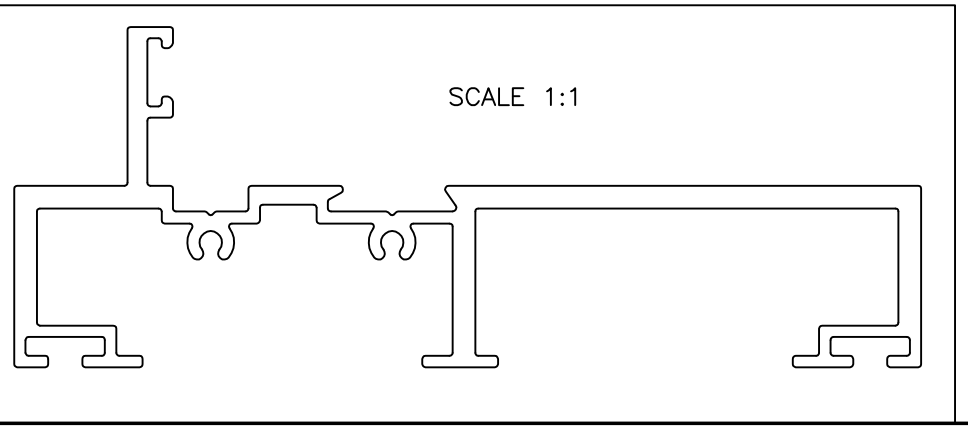

JINDAL
SYMBOL OF QUALITY
AN ISO 9001 COMPANY

JINDAL ALUMINIUM LTD.
BANGALORE-560073 (INDIA)

1. ALL DIMENSIONS ARE IN mm.
2. ROUND OFF ALL SHARP CORNERS WITH 0.40 mm.
3. TOLERANCES WILL BE AS PER IS:3965-1981 UNLESS OTHERWISE SPECIFIED

	NAME	DATE
DRAWN	J.P.KAUSHIK	19-12-2008
CHECKED		
APPROVED		

SCALE	2:1
AREA mm^2	693.821
PERIMETER mm.	587.567
WEIGHT kg/m	1.873

PARTY'S NAME	NCC URBAN INFRASTRACTURE LTD., NEW DELHI
PARTY'S DRAWING No.	AS PER DRAWING
ALLOY & TEMPER	HE9 WP
DESCRIPTION	WINDOW SECTION

DRAWING No.	SECTION No.
P-8879-1	–
21274	21274