P-8908-1
21280

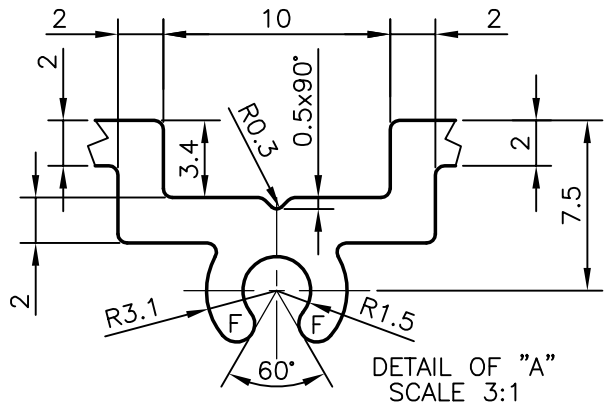

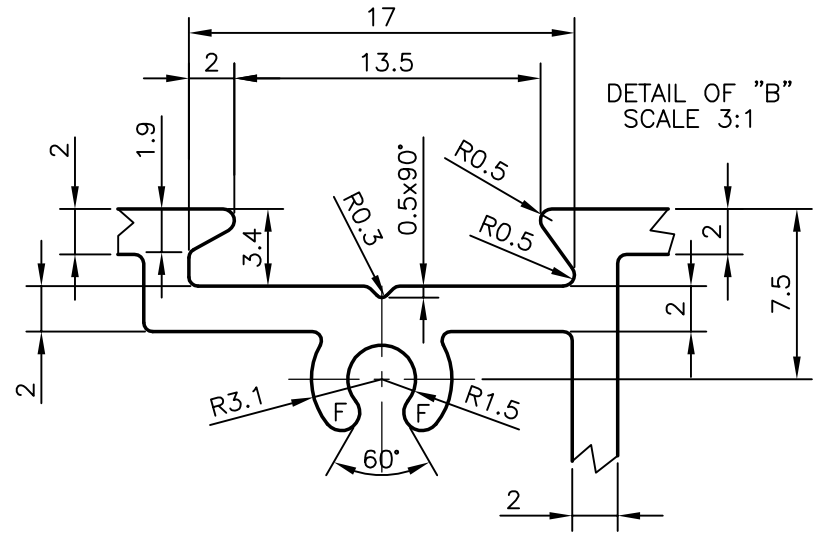

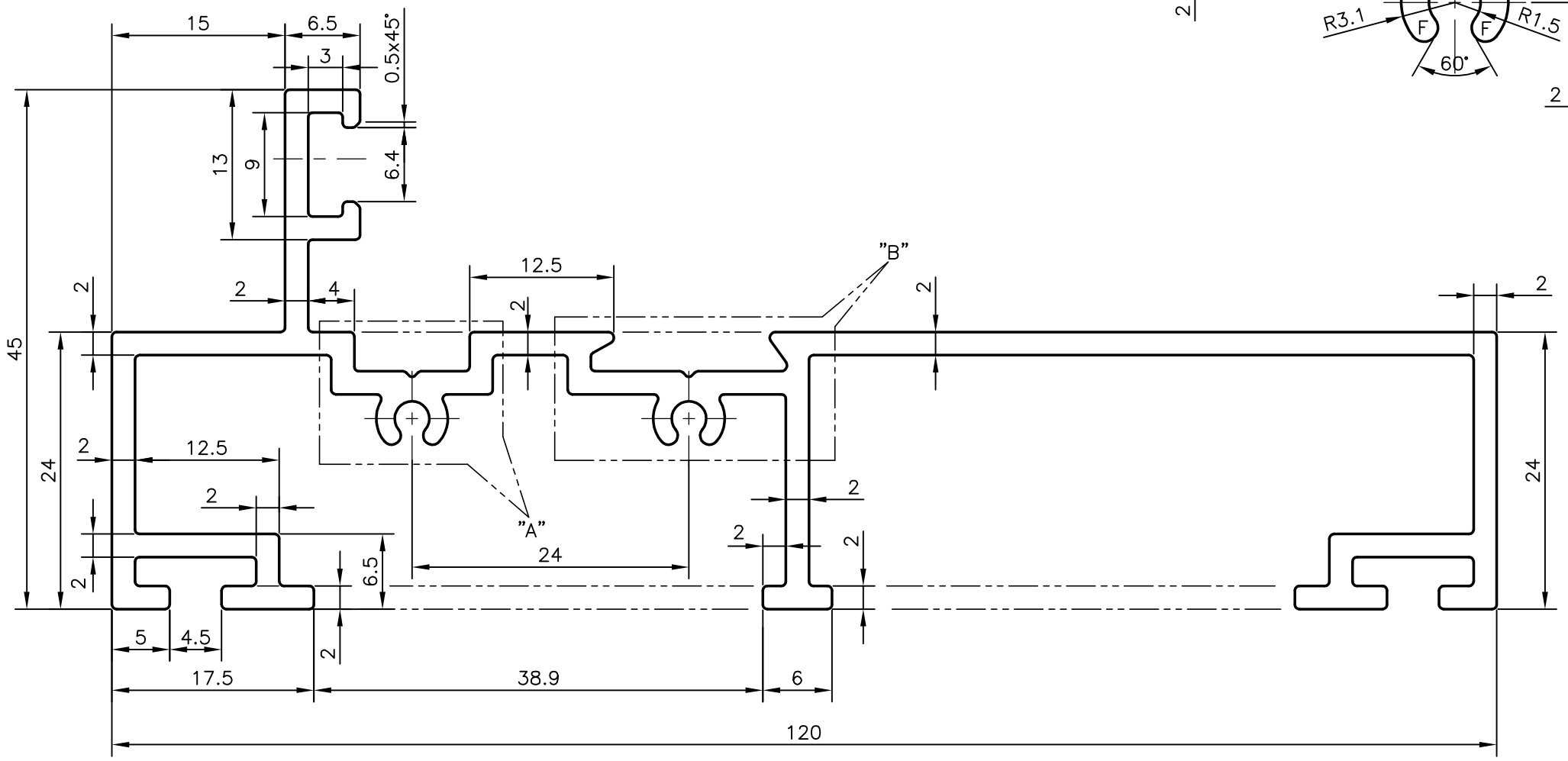

F = FULL RADIUS (4 PLACES)

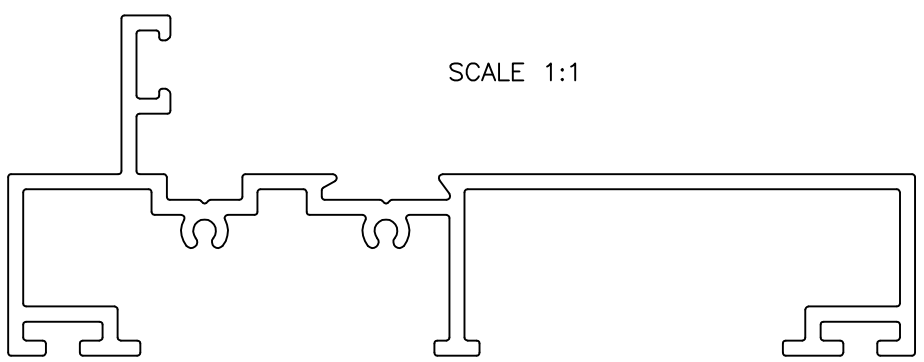

PLEASE SPECIFY THE EXPOSED SURFACE IN THE DRAWING WHEREVER BETTER FINISH REQUIRED.

			NAME	DATE
JINDAL SYMBOL OF QUALITY AN ISO 9001 COMPANY	*JINDAL ALUMINIUM LTD.* *BANGALORE-560073 (INDIA)*	DRAWN	RAGHAVENDRA	13-12-2008
		CHECKED		
		APPROVED		

1. ALL DIMENSIONS ARE IN mm.
2. ROUND OFF ALL SHARP CORNERS WITH 0.40 mm.
3. TOLERANCES WILL BE AS PER IS:3965-1981 UNLESS OTHERWISE SPECIFIED

SCALE	2:1
AREA mm^2	603.612
PERIMETER mm.	596.821
WEIGHT kg/m	1.630

PARTY'S NAME	GENERAL CATEGORY, DELHI MARKET
PARTY'S DRAWING No.	AS PER SAMPLE & AS PER REQUIREMENT
ALLOY & TEMPER	HE9 WP
DESCRIPTION	WINDOW SECTION

DRAWING No.	SECTION No.
P-8908-1	–
21280	21280